240 LEIGH FARM ROAD, SUITE 415
DURHAM, NC 27707

MARQUETTE DRIVE/IL-0107
LDD PARKING/CH95621D

SITE ADDRESS

769 BOLINGBROOK DR.
ROMEOVILLE, IL 60446
WILL COUNTY
LATITUDE: 41° 40' 09.89" (41.6694) N
LONGITUDE: 88° 04' 01.48" (88.0670) W
GROUND ELEVATION: 709.17' AMSL
TAX/PIN #: 12-02-26-101-003-0000
ZONING: B-3

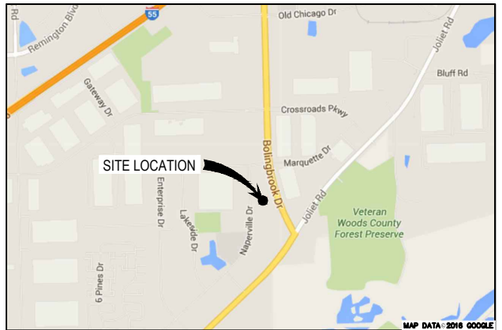

VICINITY MAP

LEAVING O'HARE INTERNATIONAL AIRPORT

- GET ON I-294 S FROM O'HARE WAY AND BALMORAL AVE
- FOLLOW I-294 S TO YOUR DESTINATION IN BOLINGBROOK. TAKE EXIT 267 FROM I-55 S
- MERGE ONTO S BOLINGBROOK DR
- ARRIVE AT 769 BOLINGBROOK DR. ROMEOVILLE, IL 60446

DRIVING DIRECTIONS

MUNICIPALITY:
WILL COUNTY

STATE:
IL

TOWER TYPE:
MONOPOLE

TOWER HEIGHT:
120' (127' TO HIGHEST APPURTENANCE)

NUMBER OF CARRIERS:
0 EXISTING, 1 PROPOSED, 3 FUTURE

USE:
PROPOSED TELECOMMUNICATIONS TOWER AND UNMANNED EQUIPMENT

CONSULTANT
W-T COMMUNICATION DESIGN GROUP, LLC.
2675 PRATUM AVENUE
HOFFMAN ESTATES, IL 60192
PHONE: (224) 293-6333
ATTN.: KATIE SCHULTZ

PROJECT SUMMARY

DEVELOPER
ECO-SITE
240 LEIGH FARM ROAD, SUITE 415
DURHAM, NC 27707
PHONE: (919) 636-6810
ATTN: TBD

VILLAGE OF ROMEOVILLE
615 ANDERSON DRIVE
ROMEOVILLE, IL 60446
PHONE: (815) 886-1870
ATTN: MR. JONATHON A. ZABROCKI, P.E.

POWER COMPANY
COMED
PHONE: (800) 334-7661
ATTN.: CUSTOMER SERVICE

TELEPHONE COMPANY
T.B.D.
PHONE: T.B.D.
ATTN.: T.B.D.

PROPERTY OR TOWER OWNER
LDD PARKING LLC
8100 W. 47TH ST.
LYONS, IL 60534
PHONE: (708) 526-2100 EXT. 114
ATTN.: VLATKO DODEVSKI

CONTACTS

SHEET	DESCRIPTION	REV.
T-1	COVER SHEET	C
LS-1	SITE SURVEY	1
LS-2	SITE SURVEY	1
GN-1	GENERAL NOTES	C
GN-2	GENERAL NOTES	C
GN-3	CARRIER NOTES	C
C-1	OVERALL SITE PLAN	C
C-1.1	ACCESS ROAD TURNING MOVEMENT PLAN	C
C-2	SITE PLAN	C
C-3	CARRIER EQUIPMENT PAD DETAILS	C
C-4	EQUIPMENT ELEVATIONS	C
C-5	EQUIPMENT ELEVATIONS	C
C-6	FENCE, GATE & COMPOUND DETAILS	C
C-7	GRADING PLAN	C
C-7.1	EROSION CONTROL PLAN	C
C-7.2	GRADING & EROSION CONTROL DETAILS	C
C-7.3	GRADING & EROSION CONTROL DETAILS	C
C-8	ACCESS ROAD DETAILS	C
C-9	SITE SIGNAGE DETAILS	C
C-10	WAVEGUIDE BRIDGE DETAILS	C
C-11	ANTENNA & TOWER ELEVATION DETAILS	C
C-12	ANTENNA PLAN 120 FT. LEVEL	C
C-13	EQUIPMENT SPECIFICATIONS	C
C-14	EQUIPMENT SPECIFICATIONS	C
C-15	RF DATA SHEET	C
C-16	ANTENNA CONFIGURATION SHEET	C
L-1	LANDSCAPING PLAN	C
L-2	LANDSCAPING DETAILS	C
E-1	BASIC SERVICE ROUTING PLAN	C
E-2	GROUNDING PLAN	C
E-3	UTILITY RISER & SINGLE-LINE DIAGRAMS	C
E-4	ELECTRICAL DETAILS	C
E-5	H-FRAME DETAIL	C
E-6	H-FRAME DETAIL	C
E-7	GROUNDING DETAILS	C
E-8	GROUNDING DETAILS	C
E-9	GROUNDING DETAILS	C
-	TOWER FOUNDATION DRAWINGS (PENDING)	

SHEET INDEX

LCC TELECOM SERVICES, LLC
10700 W. HIGGINS, SUITE 240
ROSEMONT, IL 60018
PHONE: (847) 608-7911
FAX: (630) 503-7911

SITE ACQUISITION

Eco-Site
240 LEIGH FARM ROAD, SUITE 415
DURHAM, NC 27707

PROJECT INFORMATION:
MARQUETTE DRIVE/IL-0107
LDD PARKING/CH95621D
769 BOLINGBROOK DR.
ROMEOVILLE, IL, 60446
WILL COUNTY
T1505856

CURRENT ISSUE DATE:
01/20/17

ISSUED FOR:
REVISION

REV:	DATE:	ISSUED FOR:	BY:
A	10/14/16	FOR CLIENT REVIEW	KLS
B	11/14/16	REVISION	KLS
C	01/20/17	REVISION	KLO

CONSULTANT:
W-T
W-T COMMUNICATION DESIGN GROUP, LLC.
WIRELESS INFRASTRUCTURE
2675 Pratum Avenue
Hoffman Estates, Illinois 60192
PH: (224) 293-6333 FAX: (224) 293-6444
www.wtengineering.com
IL. License No.: 184.006042 Exp: 04/30/17
COPYRIGHT © 2017 W-T COMMUNICATION DESIGN GROUP, LLC.

DRAWN BY:	CHK:	APV:
KLS	JKR	JKR

LICENSER:
JEFFERY S. GUTOWSKY
PROFESSIONAL ENGINEER
STATE OF ILLINOIS
LICENSE # 062-047235
EXPIRES: 11/30/2017 SIGNED: / /

SHEET TITLE:
COVER SHEET

SHEET NUMBER: T-1
REVISION: C

PROPOSED ECO-SITE LEASE AREA DESCRIPTION
THAT PART OF LOT 2 IN LAMPLIGHTER BUSINESS PARK A SUBDIVISION OF PART OF THE WEST HALF OF THE NORTHWEST QUARTER OF SECTION 26, TOWNSHIP 37 NORTH, RANGE 10, EAST OF THE THIRD PRINCIPAL MERIDIAN, DESCRIBED AS FOLLOWS: COMMENCING AT THE NORTHWEST CORNER OF SAID LOT 2; THENCE NORTH 88 DEGREES 03 MINUTES 18 SECONDS EAST ALONG THE NORTH LINE OF SAID LOT 2, FOR A DISTANCE OF 29.98 FEET; THENCE SOUTH 01 DEGREES 36 MINUTES 41 SECONDS EAST, 10.00 FEET TO THE POINT OF BEGINNING; THENCE NORTH 88 DEGREES 03 MINUTES 18 SECONDS EAST, 50.00 FEET; THENCE SOUTH 01 DEGREES 56 MINUTES 42 SECONDS EAST, 50.00 FEET; THENCE SOUTH 88 DEGREES 03 MINUTES 18 SECONDS WEST, 50.00 FEET; THENCE NORTH 01 DEGREES 56 MINUTES 42 SECONDS WEST, 50.00 FEET TO THE POINT OF BEGINNING, CONTAINING 2,500.00 SQUARE FEET, ALL IN WILL COUNTY, ILLINOIS.

PROPOSED T-MOBILE LEASE AREA DESCRIPTION
THAT PART OF LOT 2 IN LAMPLIGHTER BUSINESS PARK A SUBDIVISION OF PART OF THE WEST HALF OF THE NORTHWEST QUARTER OF SECTION 26, TOWNSHIP 37 NORTH, RANGE 10, EAST OF THE THIRD PRINCIPAL MERIDIAN, DESCRIBED AS FOLLOWS: COMMENCING AT THE NORTHWEST CORNER OF SAID LOT 2; THENCE NORTH 88 DEGREES 03 MINUTES 18 SECONDS EAST ALONG THE NORTH LINE OF SAID LOT 2, FOR A DISTANCE OF 72.25 FEET; THENCE SOUTH 01 DEGREES 56 MINUTES 42 SECONDS EAST, 29.46 FEET TO THE POINT OF BEGINNING; THENCE CONTINUING SOUTH 01 DEGREES 56 MINUTES 42 SECONDS EAST, 15.00 FEET; THENCE SOUTH 88 DEGREES 03 MINUTES 18 SECONDS WEST, 10.00 FEET; THENCE NORTH 01 DEGREES 56 MINUTES 42 SECONDS WEST, 15.00 FEET; THENCE NORTH 88 DEGREES 03 MINUTES 18 SECONDS EAST, 10.00 FEET TO THE POINT OF BEGINNING, CONTAINING 150.00 SQUARE FEET, ALL IN WILL COUNTY, ILLINOIS.

PROPOSED ACCESS AND UTILITY EASEMENT DESCRIPTION
THAT PART OF LOT 2 IN LAMPLIGHTER BUSINESS PARK A SUBDIVISION OF PART OF THE WEST HALF OF THE NORTHWEST QUARTER OF SECTION 26, TOWNSHIP 37 NORTH, RANGE 10, EAST OF THE THIRD PRINCIPAL MERIDIAN, DESCRIBED AS FOLLOWS: COMMENCING AT THE NORTHWEST CORNER OF SAID LOT 2; THENCE NORTH 88 DEGREES 03 MINUTES 18 SECONDS EAST ALONG THE NORTH LINE OF SAID LOT 2, FOR A DISTANCE OF 29.98 FEET; THENCE SOUTH 01 DEGREES 56 MINUTES 42 SECONDS WEST, 60.00 FEET TO THE SOUTHWEST CORNER OF THE AFORESAID LEASE AREA; THENCE NORTH 88 DEGREES 03 MINUTES 18 SECONDS ALONG THE SOUTH LINE OF SAID LEASE AREA, 2.76 FEET TO THE POINT OF BEGINNING; THENCE CONTINUING NORTH 88 DEGREES 03 MINUTES 18 SECONDS WEST ALONG SAID SOUTH LINE, 33.86 FEET; THENCE SOUTH 10 DEGREES 18 MINUTES 47 SECONDS EAST, 11.09 FEET; THENCE SOUTH 55 DEGREES 18 MINUTES 47 SECONDS EAST, 26.17 FEET; THENCE NORTH 79 DEGREES 40 MINUTES 42 SECONDS EAST, 15.11 FEET; THENCE SOUTH 10 DEGREES 01 MINUTES 31 SECONDS EAST, 27.00 FEET; THENCE SOUTH 79 DEGREES 40 MINUTES 42 SECONDS WEST, 14.98 FEET; THENCE SOUTH 34 DEGREES 41 MINUTES 13 SECONDS WEST, 26.16 FEET; THENCE SOUTH 10 DEGREES 18 MINUTES 47 SECONDS EAST, 27.21 FEET; THENCE SOUTH 90 DEGREES 00 MINUTES 00 SECONDS EAST, 121.27 FEET TO THE WEST LINE OF ILLINOIS ROUTE 53; THENCE SOUTHEASTERLY 36.62 FEET ALONG A CURVE TO THE LEFT, HAVING A RADIUS OF 3875.44 FEET (CHORD BEARS SOUTH 23 DEGREES 48 MINUTES 24 SECONDS EAST, 36.62 FEET) ALONG SAID WEST LINE; THENCE NORTH 90 DEGREES 00 MINUTES 00 SECONDS WEST, 164.00 FEET; THENCE NORTH 10 DEGREES 18 MINUTES 47 SECONDS WEST, 135.18 FEET TO SAID SOUTH LINE OF THE AFORESAID LEASE AREA, SAID POINT ALSO BEING THE POINT OF BEGINNING, CONTAINING 10,002.82 SQUARE FEET, ALL IN WILL COUNTY, ILLINOIS.

PARENT PARCEL DESCRIPTION
LOT 2 IN LAMPLIGHTER BUSINESS PARK, A SUBDIVISION OF PART OF THE WEST 1/2 OF THE NORTHWEST 1/4 OF SECTION 26, TOWNSHIP 37 NORTH, RANGE 10, EAST OF THE THIRD PRINCIPAL MERIDIAN, IN WILL COUNTY, ILLINOIS. EXCEPTING THEREFROM THE FOLLOWING: THAT PART OF LOT 2 IN LAMPLIGHTER BUSINESS PARK, A SUBDIVISION OF PART OF THE WEST 1/2 OF THE NORTHWEST 1/4 OF SECTION 26, TOWNSHIP 37 NORTH, RANGE 10 EAST OF THE THIRD PRINCIPAL MERIDIAN, ACCORDING TO THE PLAT THEREOF RECORDED SEPTEMBER 24, 1981, AS DOCUMENT R81- 23579, DESCRIBED AS FOLLOWS: BEGINNING AT THE SOUTHWEST CORNER OF SAID LOT 2; THENCE NORTH 2 DEGREES 53 MINUTES 03 SECONDS WEST ALONG THE WEST LINE OF SAID LOT 2, A DISTANCE OF 250.00 FEET; THENCE SOUTH 48 DEGREES 12 MINUTES 53 SECONDS EAST 355.61 FEET TO THE SOUTHEAST CORNER OF SAID LOT 2; THENCE SOUTH 87 DEGREES 06 MINUTES 56 SECONDS WEST ALONG THE SOUTH LINE OF SAID LOT 2, A DISTANCE OF 252.90 FEET TO THE SOUTHWEST CORNER THEREOF, BEING ALSO THE PLACE OF BEGINNING, IN WILL COUNTY, ILLINOIS.

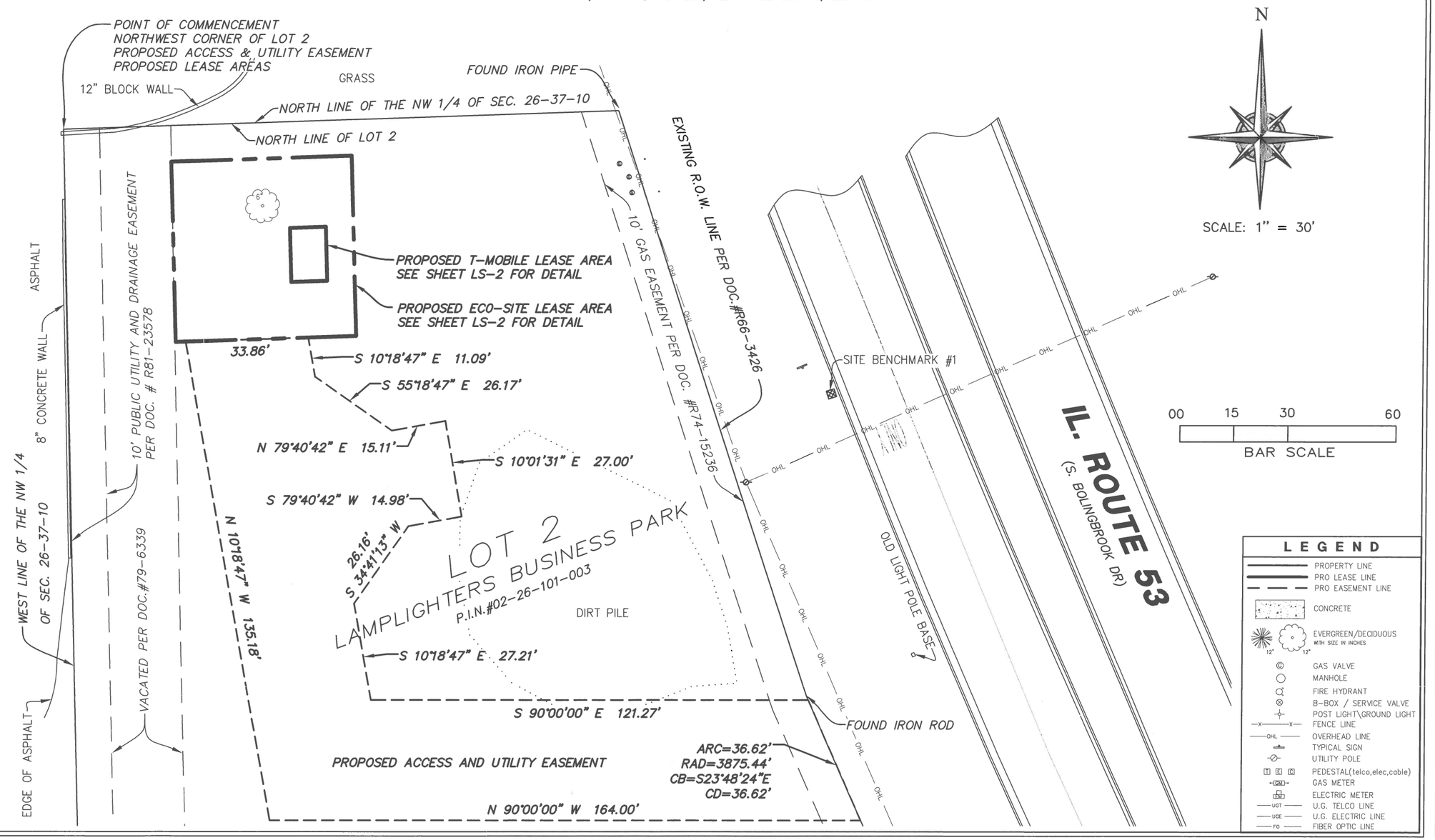

LEGEND

- PROPERTY LINE
- PRO LEASE LINE
- PRO EASEMENT LINE
- CONCRETE
- EVERGREEN/DECIDUOUS WITH SIZE IN INCHES
- GAS VALVE
- MANHOLE
- FIRE HYDRANT
- B-BOX / SERVICE VALVE
- POST LIGHT\GROUND LIGHT
- FENCE LINE
- OVERHEAD LINE
- TYPICAL SIGN
- UTILITY POLE
- PEDESTAL(telco,elec,cable)
- GAS METER
- ELECTRIC METER
- U.G. TELCO LINE
- U.G. ELECTRIC LINE
- FIBER OPTIC LINE

Eco-Site
240 LEIGH FARM ROAD, SUITE 415
DURHAM, NC 27707

PROJECT INFORMATION:
MARQUETTE DRIVE/IL-0107
LDD PARKING/CH95621D
769 BOLINGBROOK DR.
ROMEOVILLE, IL, 60446
WILL COUNTY
S16024

CURRENT ISSUE DATE: 01/10/17

ISSUED FOR: FOR CLIENT REVIEW

REV:	DATE:	ISSUED FOR:	BY:
1	11/11/16	REVISED	KCH
2	01/10/17	REVISED	KCH

CONSULTANT:
W-T LAND SURVEYING, INC.
LAND AND CONSTRUCTION SURVEYORS
2675 Pratum Avenue
Hoffman Estates, Illinois 60192
PH: (224) 293-6333 FAX: (224) 293-6444
www.wtengineering.com
IL. License No.: 184.006042 Exp: 04/30/18
COPYRIGHT © 2017 W-T LAND SURVEYING, INC.

DRAWN BY:	CHK:	APV:
KCH	FIM	FIM

LICENSER:
PROFESSIONAL LAND SURVEYOR
FRANJO I. MATICIC
035-003556
HOFFMAN ESTATES
ILLINOIS
STATE OF ILLINOIS
FRANJO I. MATICIC
PROFESSIONAL LAND SURVEYOR
STATE OF ILLINOIS
LICENSE # 035-003556
EXPIRES: 11/30/2018 SIGNED: / /

SHEET TITLE: SURVEY

SHEET NUMBER: S-1
OF 2 SHEETS
REVISION:

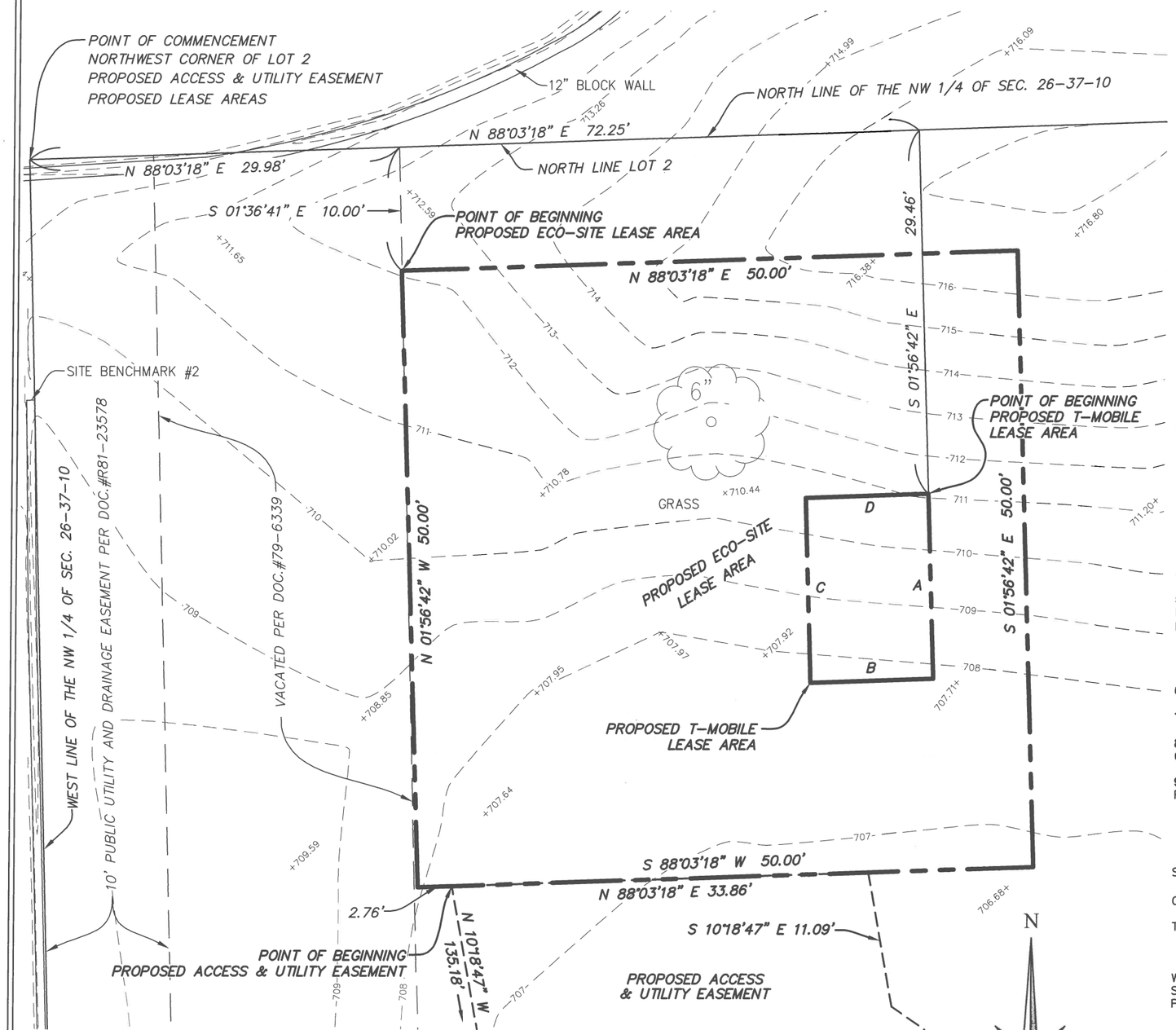

LOCATION MAP

NOTES:

1. SITE BENCHMARK #1 – CROSS CUT ON HAND HOLE ON THE WEST SIDE OF IL. ROUTE 53 (BOLINGBROOK DR) AS SHOWN. ELEVATION=711.44' (NAVD88)

   SITE BENCHMARK #2 – SQUARE CUT ON RETAINING WALL LOCATED WEST OF THE PROPOSED LEASE AREA AS SHOWN. ELEVATION = 709.89' (NAVD88)

2. PERMANENT INDEX NUMBER: 02-26-101-003

3. THE LOCATION OF UNDERGROUND UTILITIES WAS DETERMINED BY FIELD OBSERVATION AND VISIBLE MARKINGS ONLY.

4. FIELD WORK COMPLETED ON 02/03/16.

5. SURVEY WAS PREPARED WITH THE AID OF A TITLE SEARCH REPORT PREPARED BY SANCHEZ & REVERA TITLE, LLC, FILE NUMBER 155464698T, HAVING AN DATE OF 2/10/16.
   ADDITIONAL MATTERS OF RECORD:
   2. LEASE PER DOC. #R2009116956 IS NOT PLOTTABLE
   3. MORTGAGE PER DOC. #R2015018601 IS NOT PLOTTABLE

6. SURVEY PREPARED FOR: W-T COMMUNICATION DESIGN GROUP, LLC.

7. LATITUDE: N 41°40'09.89" LONGITUDE: W 088°04'01.48"

8. BASIS OF BEARINGS IS TRUE NORTH BASED ON ILLINOIS STATE PLANE COORDINATE SYSTEM, ILLINOIS EAST 1201 ZONE.

9. ANY DISCREPANCIES FOUND WITHIN THIS DOCUMENT NEED TO BE REPORTED TO THE SURVEYOR AS SOON AS POSSIBLE.

STATE OF ILLINOIS)
) SS
COUNTY OF COOK)

TO: ECO-SITE
SANCHEZ & RIVERA TITLE, LLC

WE W-T LAND SURVEYING, INC. DO HEREBY DECLARE THAT WE HAVE SURVEYED THE ABOVE DESCRIBED PROPOSED LEASE AREA AND THAT THIS PLAT IS A CORRECT REPRESENTATION OF SAID SURVEY.

GIVEN UNDER OUR HAND AND SEAL THIS 10TH DAY OF JANUARY A.D. 2017. AT HOFFMAN ESTATES, ILLINOIS.

W-T LAND SURVEYING, INC. ILLINOIS

FRANJO I. MATICIC – PLS #035-003556 EXPIRES 11/30/2018
ILLINOIS PROFESSIONAL DESIGN FIRM LICENSE NO. 184-006042

PROFESSIONAL LAND SURVEYOR FRANJO I. MATICIC 035-003556 HOFFMAN ESTATES ILLINOIS STATE OF ILLINOIS

LEGEND

PROPERTY LINE	FIRE HYDRANT
PRO LEASE LINE	B-BOX / SERVICE VALVE
PRO EASEMENT LINE	POST LIGHT\GROUND LIGHT
CONCRETE	FENCE LINE
	OVERHEAD LINE
EVERGREEN/DECIDUOUS WITH SIZE IN INCHES	TYPICAL SIGN
	UTILITY POLE
	PEDESTAL(telco,elec,cable)
GAS VALVE	GAS METER
MANHOLE	ELECTRIC METER

LINE TABLE		
A	S 01°56'42" E	15.00'
B	S 88°03'18" W	10.00'
C	N 01°56'42" W	15.00'
D	N 88°03'18" E	10.00'

Eco-Site
240 LEIGH FARM ROAD, SUITE 415
DURHAM, NC 27707

PROJECT INFORMATION:
MARQUETTE DRIVE/IL-0107
LDD PARKING/CH95621D
769 BOLINGBROOK DR.
ROMEOVILLE, IL, 60446
WILL COUNTY
S16024

CURRENT ISSUE DATE: 01/10/17

ISSUED FOR: FOR CLIENT REVIEW

REV:	DATE:	ISSUED FOR:	BY:
1	11/11/16	REVISED	KCH
2	01/10/17	REVISED	KCH

CONSULTANT:
W-T
W-T LAND SURVEYING, INC.
LAND AND CONSTRUCTION SURVEYORS
2675 Pratum Avenue
Hoffman Estates, Illinois 60192
PH: (224) 293-6333 FAX: (224) 293-6444
www.wtengineering.com
IL. License No.: 184.006042 Exp: 04/30/18
COPYRIGHT © 2017 W-T LAND SURVEYING, INC.

DRAWN BY:	CHK:	APV:
KCH	FIM	FIM

LICENSER:
PROFESSIONAL LAND SURVEYOR FRANJO I. MATICIC 035-003556 HOFFMAN ESTATES ILLINOIS STATE OF ILLINOIS
FRANK I. MATICIC
PROFESSIONAL LAND SURVEYOR
STATE OF ILLINOIS
LICENSE # 035-003556
EXPIRES: 11/30/2018 SIGNED: / /

SHEET TITLE: SURVEY

SHEET NUMBER: S-2 OF 2 SHEETS
REVISION:

SITE WORK GENERAL NOTES: DETAIL 1 / GN-1

1. THE CONTRACTOR SHALL CONTACT UTILITY LOCATING SERVICES PRIOR TO THE START OF CONSTRUCTION. CONTRACTOR IS TO POT HOLE UTILITY LOCATES POST MARKING TO VERIFY UTILITY LOCATES ARE CORRECT.
2. ALL EXISTING ACTIVE SEWER, WATER, GAS, ELECTRIC AND OTHER UTILITIES WHERE ENCOUNTERED IN THE WORK, SHALL BE PROTECTED AT ALL TIMES AND WHERE REQUIRED FOR THE PROPER EXECUTION OF THE WORK, SHALL BE RELOCATED AS DIRECTED BY CONTRACTOR. EXTREME CAUTION SHOULD BE USED BY THE CONTRACTOR/SUBCONTRACTOR WHEN EXCAVATING OR DRILLING PIERS AROUND OR NEAR UTILITIES.
3. ALL SITE WORK SHALL BE AS INDICATED ON THE DRAWINGS AND PROJECT SPECIFICATIONS.
4. IF NECESSARY, RUBBISH, STUMPS, DEBRIS, STICKS, STONES AND OTHER REFUSE SHALL BE REMOVED FROM THE SITE AND DISPOSED OF LEGALLY.
5. ALL EXISTING INACTIVE SEWER, WATER, GAS, ELECTRIC AND OTHER UTILITIES, WHICH INTERFERE WITH THE EXECUTION OF THE WORK, SHALL BE REMOVED AND/OR CAPPED, PLUGGED OR OTHERWISE DISCONTINUED AT POINTS WHICH WILL NOT INTERFERE WITH THE EXECUTION OF THE WORK, SUBJECT TO THE APPROVAL OF CONTRACTOR, OWNER AND/OR LOCAL UTILITIES.
6. THE OWNER SHALL PROVIDE SITE SIGNAGE IN ACCORDANCE WITH THE TECHNICAL SPECIFICATION FOR SITE SIGNAGE (TO BE INSTALLED BY CONTRACTOR).
7. THE SITE SHALL BE GRADED TO CAUSE SURFACE WATER TO FLOW AWAY FROM THE BTS EQUIPMENT AND TOWER AREAS.
8. NO FILL OR EMBANKMENT MATERIAL SHALL BE PLACED ON FROZEN GROUND. FROZEN MATERIALS, SNOW OR ICE SHALL NOT BE PLACED IN ANY FILL OR EMBANKMENT.
9. THE SUB GRADE SHALL BE COMPACTED AND BROUGHT TO A SMOOTH UNIFORM GRADE PRIOR TO FINISHED SURFACE APPLICATION.
10. THE AREAS OF THE OWNERS PROPERTY DISTURBED BY THE WORK AND NOT COVERED BY THE TOWER, EQUIPMENT OR DRIVEWAY, SHALL BE GRADED TO A UNIFORM SLOPE, AND STABILIZED TO PREVENT EROSION AS SPECIFIED ON THE PROJECT SPECIFICATIONS.
11. CONTRACTOR SHALL MINIMIZE DISTURBANCE TO EXISTING SITE DURING CONSTRUCTION. EROSION CONTROL MEASURES, IF REQUIRED DURING CONSTRUCTION, SHALL BE IN CONFORMANCE WITH THE LOCAL GUIDELINES FOR EROSION AND SEDIMENT CONTROL.
12. CONTRACTOR SHALL NOT INSTALL EQUIPMENT THAT WILL IMPEDE DOOR OR ACCESS PANELS.

ABBREVIATIONS AND SYMBOLS:

ABBREVIATIONS:

AGL	ABOVE GRADE LEVEL
BTS	BASE TRANSCEIVER STATION
(E)	EXISTING
MIN.	MINIMUM
N.T.S.	NOT TO SCALE
REF	REFERENCE
RF	RADIO FREQUENCY
T.B.D.	TO BE DETERMINED
T.B.R.	TO BE RESOLVED
TYP	TYPICAL
REQ	REQUIRED
EGR	EQUIPMENT GROUND RING
AWG	AMERICAN WIRE GAUGE
MGB	MASTER GROUND BUSS
EG	EQUIPMENT GROUND
BCW	BARE COPPER WIRE
SIAD	SMART INTEGRATED ACCESS DEVICE
GEN	GENERATOR
IGR	INTERIOR GROUND RING (HALO)
RBS	RADIO BASE STATION
U.N.O.	UNLESS NOTED OTHERWISE

SYMBOLS:

S/G	SOLID GROUND BUSS BAR
S/N	SOLID NEUTRAL BUSS BAR
	SUPPLEMENTAL GROUND CONDUCTOR
	2-POLE THERMAL-MAGNETIC CIRCUIT BREAKER
	SINGLE-POLE THERMAL-MAGNETIC CIRCUIT BREAKER
	CHEMICAL GROUND ROD
	DISCONNECT SWITCH
M	METER
	EXOTHERMIC WELD (CADWELD) (UNLESS OTHERWISE NOTED)
	MECHANICAL WELD
	5/8" x 10'-0" COPPER CLAD STEEL GROUND ROD
	5/8" x 10'-0" COPPER CLAD STEEL GROUND ROD WITH INSPECTION SLEEVE
	GROUNDING WIRE

STRUCTURAL STEEL NOTES: DETAIL 2 / GN-1

1. ALL STEEL WORK SHALL BE PAINTED IN ACCORDANCE WITH THE PROJECT SPECIFICATIONS AND IN ACCORDANCE WITH ASTM A36 UNLESS OTHERWISE NOTED.
2. ALL WELDING SHALL BE PERFORMED USING E70XX ELECTRODES AND WELDING SHALL CONFORM TO AISC. WHERE FILLET WELD SIZES ARE NOT SHOWN, PROVIDE THE MINIMUM SIZE PER TABLE J2.4 IN THE AISC "MANUAL OF STEEL CONSTRUCTION". PAINTED SURFACES SHALL BE TOUCHED UP.
3. BOLTED CONNECTIONS SHALL BE ASTM A325 BEARING TYPE (3/4"ø) CONNECTIONS AND SHALL HAVE MINIMUM OF TWO BOLTS UNLESS NOTED OTHERWISE.
4. NON-STRUCTURAL CONNECTIONS FOR STEEL GRATING MAY USE 5/8"ø ASTM A307 BOLTS UNLESS NOTED OTHERWISE.
5. INSTALLATION OF CONCRETE EXPANSION/WEDGE ANCHOR, SHALL BE PER MANUFACTURER'S RECOMMENDED PROCEDURE. THE ANCHOR BOLT, DOWEL OR ROD SHALL CONFORM TO MANUFACTURER'S RECOMMENDATION FOR EMBEDMENT DEPTH OR AS SHOWN ON THE DRAWINGS. NO REBAR SHALL BE CUT WITHOUT PRIOR CONTRACTOR APPROVAL WHEN DRILLING HOLES IN CONCRETE. SPECIAL INSPECTIONS, REQUIRED BY GOVERNING CODES, SHALL BE PERFORMED IN ORDER TO MAINTAIN MANUFACTURER'S MAXIMUM ALLOWABLE LOADS.

CONCRETE AND REINFORCING STEEL NOTES: DETAIL 3 / GN-1

1. ALL CONCRETE WORK SHALL BE IN ACCORDANCE WITH THE ACI 301, ACI 318, ACI 336, ASTM A184, ASTM A185 AND THE DESIGN AND CONSTRUCTION SPECIFICATION FOR CAST-IN-PLACE CONCRETE.
2. ALL CONCRETE SHALL HAVE A MINIMUM COMPRESSIVE STRENGTH OF 3000 PSI AT 28 DAYS, UNLESS NOTED OTHERWISE. SLAB FOUNDATION DESIGN ASSUMING ALLOWABLE SOIL BEARING PRESSURE OF 2000 PSF.
3. REINFORCING STEEL SHALL CONFORM TO ASTM A615, GRADE 60, DEFORMED UNLESS NOTED OTHERWISE. WELDED WIRE FABRIC SHALL CONFORM TO ASTM A185 WELDED STEEL WIRE FABRIC UNLESS NOTED OTHERWISE. SPLICES SHALL BE CLASS "B" AND ALL HOOKS SHALL BE STANDARD, U.N.O.
4. THE FOLLOWING MINIMUM CONCRETE COVER SHALL BE PROVIDED FOR REINFORCING STEEL UNLESS SHOWN OTHERWISE ON DRAWINGS:

   CONCRETE CAST AGAINST EARTH.....3 IN.
   CONCRETE EXPOSED TO EARTH OR WEATHER:
   #6 AND LARGER.....2 IN.
   #5 AND SMALLER & WWF.....1 1/2 IN.
   CONCRETE NOT EXPOSED TO EARTH OR WEATHER OR NOT CAST AGAINST THE GROUND:
   SLAB AND WALLS.....3/4 IN.
   BEAMS AND COLUMNS.....1 1/2 IN.

5. A CHAMFER 3/4" SHALL BE PROVIDED AT ALL EXPOSED EDGES OF CONCRETE, UNO. IN ACCORDANCE WITH ACI 301 SECTION 4.2.4.

MASONRY NOTES: DETAIL 3A / GN-1

1. HOLLOW CONCRETE MASONRY UNITS SHALL MEET A.S.T.M. SPECIFICATION C90, GRADE N. TYPE 1. THE SPECIFIED DESIGN COMPRESSIVE STRENGTH OF CONCRETE MASONRY (F'm) SHALL BE 1500 PSI.
2. MORTAR SHALL MEET THE PROPERTY SPECIFICATION OF A.S.T.M. C270 TYP. "S" MORTAR AND SHALL HAVE A MINIMUM COMPRESSIVE STRENGTH OF 2000 PSI.
3. GROUT SHALL MEET A.S.T.M. SPECIFICATION C475 AND HAVE A MINIMUM 28 DAY COMPRESSIVE STRENGTH OF 2000 PSI.
4. CONCRETE MASONRY SHALL BE LAID IN RUNNING (COMMON) BOND.
5. WALL SHALL RECEIVE TEMPORARY BRACING. TEMPORARY BRACING SHALL NOT BE REMOVED UNTIL GROUT IS FULLY CURED.

GENERAL NOTES: DETAIL 4 / GN-1

1. FOR THE PURPOSE OF CONSTRUCTION DRAWING, THE FOLLOWING DEFINITIONS SHALL APPLY:
   CONTRACTOR– GENERAL CONTRACTOR
   SUBCONTRACTOR– SUBCONTRACTOR HIRED BY GENERAL CONTRACTOR.
   OWNER– ECO-SITES
   OEM– ORIGINAL EQUIPMENT MANUFACTURER
2. PRIOR TO THE SUBMISSION OF BIDS, THE CONTRACTOR SHALL VISIT THE CELL SITE TO FAMILIARIZE WITH THE EXISTING CONDITIONS AND TO CONFIRM THAT THE WORK CAN BE ACCOMPLISHED AS SHOWN ON THE CONSTRUCTION DRAWINGS. ANY DISCREPANCY FOUND SHALL BE BROUGHT TO THE ATTENTION OF OWNER.
3. ALL MATERIALS FURNISHED AND INSTALLED SHALL BE IN STRICT ACCORDANCE WITH ALL APPLICABLE CODES, REGULATIONS AND ORDINANCES. CONTRACTOR SHALL ISSUE ALL APPROPRIATE NOTICES AND COMPLY WITH ALL LAWS, ORDINANCES, RULES, REGULATIONS AND LAWFUL ORDERS OF ANY PUBLIC AUTHORITY REGARDING THE PERFORMANCE OF THE WORK. ALL WORK CARRIED OUT SHALL COMPLY WITH ALL APPLICABLE MUNICIPAL AND UTILITY COMPANY SPECIFICATIONS AND LOCAL JURISDICTIONAL CODES, ORDINANCES AND APPLICABLE REGULATIONS.
4. DRAWINGS PROVIDED WERE DESIGNED AND SCALED TO 11x17 FORMAT.
5. UNLESS NOTED OTHERWISE, THE WORK SHALL INCLUDE FURNISHING MATERIALS, EQUIPMENT, APPURTENANCES AND LABOR NECESSARY TO COMPLETE ALL INSTALLATIONS AS INDICATED ON THE DRAWINGS.
6. THE CONTRACTOR SHALL INSTALL ALL EQUIPMENT AND MATERIALS IN ACCORDANCE WITH MANUFACTURER'S RECOMMENDATIONS UNLESS SPECIFICALLY STATED OTHERWISE.
7. IF THE SPECIFIED EQUIPMENT CAN NOT BE INSTALLED AS SHOWN ON THESE DRAWINGS, THE CONTRACTOR SHALL PROPOSE AN ALTERNATIVE INSTALLATION FOR APPROVAL BY THE OWNER.
8. CONTRACTOR SHALL DETERMINE ACTUAL ROUTING OF CONDUIT, POWER AND T1 CABLES, GROUNDING CABLES AS SHOWN ON THE POWER, GROUNDING AND TELCO PLAN DRAWINGS.
9. THE CONTRACTOR SHALL PROTECT EXISTING IMPROVEMENTS, PAVEMENTS, CURBS, LANDSCAPING AND STRUCTURES. ANY DAMAGED PART SHALL BE REPAIRED AT CONTRACTOR'S EXPENSE TO THE SATISFACTION OF OWNER.
10. CONTRACTOR SHALL LEGALLY AND PROPERLY DISPOSE OF ALL SCRAP MATERIALS SUCH AS COAXIAL CABLES AND OTHER ITEMS REMOVED FROM THE EXISTING FACILITY.
11. CONTRACTOR SHALL LEAVE PREMISES IN CLEAN CONDITION.
12. CONSTRUCTION SHALL COMPLY WITH ECO-SITE MASTER SPECIFICATIONS AND THESE DRAWINGS WHERE A CONFLICT EXISTS IT IS CONTRACTORS RESPONSIBILITY TO NOTIFY OWNER.
13. NOTHING CONTAINED IN THESE DRAWINGS SHALL CREATE ANY CONTRACTUAL RELATIONSHIP BETWEEN ANY SUBCONTRACTOR(S) AND ECO-SITE.
14. CONTRACTOR SHALL HOLD HARMLESS ECO-SITE AND ITS REPRESENTATIVES FROM ALL SUITS, ACTIONS, OR CLAIMS OF ANY KIND BROUGHT ABOUT AS A RESULT OF ANY INJURIES OR DAMAGES SUSTAINED BY PERSON(S) OR PROPERTY DURING THE CONSTRUCTION OF THIS PROJECT.
15. CONTRACTOR SHALL BE RESPONSIBLE FOR INITIATING, MAINTAINING AND SUPERVISING ALL SAFETY PRECAUTIONS AND PROGRAMS FOR ANY AND ALL PERSONS, INCLUDING SUBCONTRACTORS, ON SITE AS REQUIRED BY CURRENT OSHA STANDARDS; INCLUDING BUT NOT LIMITED TO
    A) PERSONAL PROTECTIVE & LIFE SAVING EQUIPMENT
    B) SIGNS, SIGNALS, & BARRICADES
    C) TOOLS – HAND & POWER
    D) ELECTRICAL
    E) FALL PROTECTION
    F) EXCAVATIONS
    G) CONCRETE & MASONRY CONSTRUCTION
    H) STEEL ERECTION
    I) POWER TRANSMISSION & DISTRIBUTION
    J) CRANES & DERRICKS IN CONSTRUCTION.

Eco-Site
240 LEIGH FARM ROAD, SUITE 415
DURHAM, NC 27707

PROJECT INFORMATION:

MARQUETTE DRIVE/IL-0107
LDD PARKING/CH95621D

769 BOLINGBROOK DR.
ROMEOVILLE, IL, 60446
WILL COUNTY
T1505856

CURRENT ISSUE DATE: 01/20/17

ISSUED FOR: REVISION

REV:	DATE:	ISSUED FOR:	BY:
A	10/14/16	FOR CLIENT REVIEW	KLS
B	11/14/16	REVISION	KLS
C	01/20/17	REVISION	KLO

CONSULTANT:
W-T COMMUNICATION DESIGN GROUP, LLC.
WIRELESS INFRASTRUCTURE
2675 Pratum Avenue
Hoffman Estates, Illinois 60192
PH: (224) 293-6333 FAX: (224) 293-6444
www.wtengineering.com
IL. License No.: 184.006042 Exp: 04/30/17

COPYRIGHT © 2017 W-T COMMUNICATION DESIGN GROUP, LLC.

DRAWN BY:	CHK:	APV:
KLS	JKR	JKR

LICENSER:

JEFFERY S. GUTOWSKY
PROFESSIONAL ENGINEER
STATE OF ILLINOIS
LICENSE # 062-047235
EXPIRES: 11/30/2017 SIGNED: / /

SHEET TITLE: **GENERAL NOTES**

SHEET NUMBER: **GN-1** REVISION: **C**

ELECTRICAL INSTALLATION NOTES:

DETAIL 1 / GN-2

1. ALL ELECTRICAL WORK SHALL BE PERFORMED IN ACCORDANCE WITH THE PROJECT SPECIFICATIONS, NEC AND ALL APPLICABLE LOCAL CODES.
2. CONDUIT ROUTINGS ARE SCHEMATIC. SUBCONTRACTOR SHALL INSTALL CONDUITS SO THAT ACCESS TO EQUIPMENT IS NOT BLOCKED.
3. WIRING, RACEWAY AND SUPPORT METHODS AND MATERIALS SHALL COMPLY WITH THE REQUIREMENTS OF THE NEC.
4. ALL CIRCUITS SHALL BE SEGREGATED AND MAINTAIN MINIMUM CABLE SEPARATION AS REQUIRED BY THE NEC.
5. CABLES SHALL NOT BE ROUTED THROUGH LADDER–STYLE CABLE TRAY RUNGS.
6. EACH END OF EVERY POWER, POWER PHASE CONDUCTOR (I.E., HOTS), GROUNDING AND T1 CONDUCTOR AND CABLE SHALL BE LABELED WITH COLOR–CODED INSULATION OR ELECTRICAL TAPE (3M BRAND, 1/2" PLASTIC ELECTRICAL TAPE WITH UV PROTECTION, OR EQUAL). THE IDENTIFICATION METHOD SHALL CONFORM WITH NEC AND OSHA.
7. ALL ELECTRICAL COMPONENTS SHALL BE CLEARLY LABELED WITH PLASTIC TAPE PER COLOR SCHEDULE. ALL EQUIPMENT SHALL BE LABELED WITH THEIR VOLTAGE RATING, PHASE CONFIGURATION, WIRE CONFIGURATION, POWER OR AMPACITY RATING AND BRANCH CIRCUIT ID NUMBERS (I.E. PANEL BOARD AND CIRCUIT ID'S).
8. PANEL BOARDS (ID NUMBERS) AND INTERNAL CIRCUIT BREAKERS (CIRCUIT ID NUMBERS) SHALL BE CLEARLY LABELED WITH PLASTIC LABELS.
9. ALL TIE WRAPS SHALL BE CUT FLUSH WITH APPROVED CUTTING TOOL TO REMOVE SHARP EDGES.
10. POWER, CONTROL AND EQUIPMENT GROUND WIRING IN TUBING OR CONDUIT SHALL BE SINGLE CONDUCTOR (#14 AWG OR LARGER), 600 V, OIL RESISTANT THHN OR THWN–2, CLASS B STRANDED COPPER CABLE RATED FOR 90° C (WET & DRY) OPERATION LISTED OR LABELED FOR THE LOCATION AND RACEWAY SYSTEM USED UNLESS OTHERWISE SPECIFIED.
11. SUPPLEMENTAL EQUIPMENT GROUND WIRING LOCATED INDOORS SHALL BE SINGLE CONDUCTOR (#6 AWG OR LARGER), 600V, OIL RESISTANT THHN OR THWN–2 GREEN INSULATION CLASS B STRANDED COPPER CABLE RATED FOR 90° C (WET AND DRY) OPERATION LISTED OR LABELED FOR THE LOCATION AND RACEWAY SYSTEM USED UNLESS OTHERWISE SPECIFIED.
12. POWER AND CONTROL WIRING, NOT IN TUBING OR CONDUIT, SHALL BE MULTI–CONDUCTOR, TYPE TC CABLE (#14 AWG OR LARGER), 600 V, OIL RESISTANT THHN OR THWN–2, CLASS B STRANDED COPPER CABLE RATED FOR 90° C (WET AND DRY) OPERATION WITH OUTER JACKET LISTED OR LABELED FOR THE LOCATION USED UNLESS OTHERWISE SPECIFIED.
13. ALL POWER AND GROUNDING CONNECTIONS SHALL BE CRIMP–STYLE, COMPRESSION WIRE LUGS AND WIRE NUTS BY THOMAS AND BETTS (OR EQUAL). LUGS AND WIRE NUTS SHALL BE RATED FOR OPERATION AT NO LESS THAN 75° C (90° C IF AVAILABLE).
14. RACEWAY AND CABLE TRAY SHALL BE LISTED OR LABELED FOR ELECTRICAL USE IN ACCORDANCE WITH NEMA, UL, ANSI/IEEE AND NEC.
15. ELECTRICAL METALLIC TUBING (EMT) OR RIGID NONMETALLIC CONDUIT (I.E. RIGID PVC SCHEDULE 40 OR RIGID PVC SCHEDULE 80 FOR LOCATIONS SUBJECT TO PHYSICAL DAMAGE) SHALL BE USED FOR EXPOSED INDOOR LOCATIONS.
16. ELECTRICAL METALLIC TUBING (EMT), ELECTRICAL NONMETALLIC TUBING (ENT) OR RIGID NONMETALLIC CONDUIT (RIGID PVC, SCHEDULE 40) SHALL BE USED FOR CONCEALED INDOOR LOCATIONS.
17. GALVANIZED STEEL INTERMEDIATE METALLIC CONDUIT (IMC) SHALL BE USED FOR OUTDOOR LOCATIONS ABOVE GRADE.
18. RIGID NONMETALLIC CONDUIT (I.E. RIGID PVC SCHEDULE 40 OR RIGID PVC SCHEDULE 80) SHALL BE USED UNDERGROUND; DIRECT BURIED, IN AREAS OF OCCASIONAL LIGHT VEHICLE TRAFFIC OR ENCASED IN REINFORCED CONCRETE IN AREAS OF HEAVY VEHICLE TRAFFIC.
19. LIQUID–TIGHT FLEXIBLE METALLIC CONDUIT (LIQUID–TITE FLEX) SHALL BE USED INDOORS AND OUTDOORS, WHERE VIBRATION OCCURS OR FLEXIBILITY IS NEEDED.
20. CONDUIT AND TUBING FITTINGS SHALL BE THREADED OR COMPRESSION–TYPE AND APPROVED FOR THE LOCATION USED. SET SCREW FITTINGS ARE NOT ACCEPTABLE.
21. CABINETS, BOXES AND WIRE WAYS SHALL BE LABELED FOR ELECTRICAL USE IN ACCORDANCE WITH NEMA, UL, ANSI/IEEE AND NEC.
22. WIREWAYS SHALL BE EPOXY–COATED (GRAY) AND INCLUDE A HINGED COVER, DESIGNED TO SWING OPEN DOWNWARDS; SHALL BE PANDUIT TYPE E (OR EQUAL); AND RATED NEMA 1 (OR BETTER).

ELECTRICAL INSTALLATION NOTES (CONT.):

23. EQUIPMENT CABINETS, TERMINAL BOXES, JUNCTION BOXES AND PULL BOXES SHALL BE GALVANIZED OR EPOXY–COATED SHEET STEEL. SHALL MEET OR EXCEED UL 50 AND RATED NEMA 1 (OR BETTER) INDOORS OR NEMA 3R (OR BETTER) OUTDOORS.
24. METAL RECEPTACLE, SWITCH AND DEVICE BOXES SHALL BE GALVANIZED, EPOXY–COATED OR NON–CORRODING; SHALL MEET OR EXCEED UL 514A AND NEMA OS 1; AND RATED NEMA 1 (OR BETTER) INDOORS OR WEATHER PROTECTED (WP OR BETTER) OUTDOORS.
25. NONMETALLIC RECEPTACLE, SWITCH AND DEVICE BOXES SHALL MEET OR EXCEED NEMA OS 2; AND RATED NEMA 1 (OR BETTER) INDOORS OR WEATHER PROTECTED (WP OR BETTER) OUTDOORS.
26. THE SUBCONTRACTOR SHALL NOTIFY AND OBTAIN NECESSARY AUTHORIZATION FROM THE CONTRACTOR BEFORE COMMENCING WORK ON THE AC POWER DISTRIBUTION PANELS.
27. THE SUBCONTRACTOR SHALL PROVIDE NECESSARY TAGGING ON THE BREAKERS, CABLES AND DISTRIBUTION PANELS IN ACCORDANCE WITH THE APPLICABLE CODES AND STANDARDS TO SAFEGUARD AGAINST LIFE AND PROPERTY.
28. INSTALL PLASTIC LABEL ON THE METER CENTER IDENTIFYING SPECIFIC CARRIER.

DETAIL 2 / GN-2

KEYED NOTES: (SEE GROUNDING PLAN DIAGRAM – SHEET E–2)

1. TOWER GROUNDING: EXTEND #2 SOLID TINNED CU WIRE FROM BURIED GROUND RING TO EXISTING TOWER AND MAKE EXOTHERMIC CONNECTION.
2. HATCH PLATE GROUND BAR: EXTEND #2 SOLID TINNED CU WIRE FROM BURIED GROUND RING UP THROUGH 1/2"ø PVC SLEEVE INTO EQUIPMENT SHELTER FOR CONNECTION TO INTERIOR HALO GROUND RING. TYPICAL AT 4 BUILDING CORNERS.
3. GROUNDING OF INTERNAL GROUND RING: EXTEND #2 TINNED CU WIRE FROM BURIED GROUND RING THROUGH 1/2" DIA. PVC SLEEVE INTO EQUIPMENT SHELTER FOR CONNECTION TO INTERIOR HALO GROUND RING. TYPICAL AT (4) BUILDING CORNERS.
4. GROUND ROD: COPPER CLAD STEEL, 5/8"ø TEN (10) FEET LONG.
5. ICE BRIDGE SUPPORT POST GROUNDING: EXTEND #2 TINNED CU WIRE FROM BURIED GROUND RING TO ALL ICE BRIDGE SUPPORT POSTS AND EXOTHERMICALLY WELD.
6. FENCE GROUNDING: IF FENCE IS WITHIN 6' OF GROUNDING RING, EXTEND #2 TINNED CU WIRE FROM BURIED GROUND RING TO FENCE CORNER POSTS AND EXOTHERMICALLY WELD. BOND INTERMEDIATE POST IF REQUIRED TO MAINTAIN 25' MAX. SPACING.
7. HVAC GROUNDING: EXTEND #2 TINNED CU WIRE FORM BURIED GROUND RING TO THE HVAC UNIT AND MAKE A MECHANICAL CONNECTION.
8. TOWER GROUNDING BAR: EXTEND #2 TINNED CU WIRE FROM BURIED GROUND RING UP TO THE TOWER GROUND BAR AND MAKE A MECHANICAL CONNECTION. SECURE GROUND BAR DIRECTLY TO TOWER WITH ISOLATOR KIT USING STAINLESS STEEL MOUNTING MATERIAL.
9. CELL REFERENCE GROUND BAR: EXTEND (2) #2 TINNED CU WIRE FROM BURIED GROUND RING UP TO THE CELL REFERENCE GROUND BAR (INSIDE SHELTER) AND MAKE AN EXOTHERMIC WELD CONNECTION.
10. TELCO GROUNDING BAR: EXTEND #2 TINNED CU WIRE FROM BURIED GROUND RING UP TO TELCO GROUND BAR (INSIDE SHELTER) AND MAKE AN EXOTHERMIC WELD CONNECTION.
11. ANTENNA GROUND BAR: MOUNT GROUND BAR DIRECTLY TO TOWER AT TOP OF COAX RUNS. SECURE TO TOWER WITH ISOLATOR KIT USING STAINLESS STEEL MOUNTING MATERIAL.
12. GATE GROUNDING: EXTEND #2 TINNED CU WIRE FROM BURIED GROUND RING TO GATE POSTS AND EXOTHERMICALLY WELD.
13. EXTERIOR GFCI RECEPTACLE GROUNDING: EXTEND #2 TINNED CU WIRE FROM BURIED GROUND RING TO THE EXTERIOR GFCI RECEPTACLE AND MAKE A MECHANICAL CONNECTION.

GREENFIELD GROUNDING NOTES:

DETAIL 3 / GN-2

1. ALL GROUND ELECTRODE SYSTEMS (INCLUDING TELECOMMUNICATION, RADIO, LIGHTNING PROTECTION AND AC POWER GES'S) SHALL BE BONDED TOGETHER AT OR BELOW GRADE, BY TWO OR MORE COPPER BONDING CONDUCTORS IN ACCORDANCE WITH THE NEC.
2. THE SUBCONTRACTOR SHALL PERFORM IEEE FALL–OF–POTENTAL RESISTANCE TO EARTH TESTING (PER IEEE 1100 AND 81) FOR GROUND ELECTRODE SYSTEMS, THE SUBCONTRACTOR SHALL FURNISH AND INSTALL SUPPLEMENTAL GROUND ELECTRODES AS NEEDED TO ACHIEVE A TEST RESULT OF 5 OHMS OR LESS.
3. THE SUBCONTRACTOR IS RESPONSIBLE FOR PROPERLY SEQUENCING GROUNDING AND UNDERGROUND CONDUIT INSTALLATION AS TO PREVENT ANY LOSS OF CONTINUITY IN THE GROUNDING SYSTEM OR DAMAGE TO THE CONDUIT AND PROVIDE TESTING RESULTS.
4. METAL CONDUIT AND TRAY SHALL BE GROUNDED AND MADE ELECTRICALLY CONTINUOUS WITH LISTED BONDING FITTINGS OR BY BONDING ACROSS THE DISCONTINUITY WITH #6 AWG COPPER WIRE UL APPROVED GROUNDING TYPE CONDUIT CLAMPS.
5. METAL RACEWAY SHALL NOT BE USED AS THE NEC REQUIRED EQUIPMENT GROUND CONDUCTOR. STRANDED COPPER CONDUCTORS WITH GREEN INSULATION, SIZED IN ACCORDANCE WITH THE NEC, SHALL BE FURNISHED AND INSTALLED WITH THE POWER CIRCUITS TO BTS EQUIPMENT.
6. EACH BTS CABINET FRAME SHALL BE DIRECTLY CONNECTED TO THE MASTER GROUND BAR WITH GREEN INSULATED SUPPLEMENTAL EQUIPMENT GROUND WIRES, 6 AWG STRANDED COPPER OR LARGER FOR INDOOR BTS; #2 AWG SOLID TINNED COPPER FOR OUTDOOR BTS.
7. ALL EXTERIOR GROUND CONDUCTORS BETWEEN EQUIPMENT/GROUND BARS AND THE GROUND RING SHALL BE #2 AWG SOLID TINNED COPPER UNLESS OTHERWISE INDICATED.
8. ALUMINUM CONDUCTOR OR COPPER CLAD STEEL CONDUCTOR SHALL NOT BE USED FOR GROUNDING CONNECTIONS.
9. USE OF 90° BENDS IN THE PROTECTION GROUNDING CONDUCTORS SHALL BE AVOIDED WHEN 45° BENDS CAN BE ADEQUATELY SUPPORTED.
10. EXOTHERMIC WELDS SHALL BE USED FOR ALL GROUNDING CONNECTIONS BELOW GRADE.
11. ALL GROUND CONNECTIONS ABOVE GRADE (INTERIOR AND EXTERIOR) SHALL BE FORMED USING HIGH PRESS CRIMPS.
12. COMPRESSION GROUND CONNECTIONS MAY BE REPLACED BY EXOTHERMIC WELD CONNECTIONS.
13. ICE BRIDGE BONDING CONDUCTORS SHALL BE EXOTHERMICALLY BONDED OR BOLTED TO THE BRIDGE AND THE TOWER GROUND BAR.
14. APPROVED ANTIOXIDANT COATINGS (I.E. CONDUCTIVE GEL OR PASTE) SHALL BE USED ON ALL COMPRESSION AND BOLTED GROUND CONNECTIONS.
15. ALL EXTERIOR GROUND CONNECTIONS SHALL BE COATED WIT A CORROSION RESISTANT MATERIAL.
16. MISCELLANEOUS ELECTRICAL AND NON–ELECTRICAL METAL BOXES, FRAMES AND SUPPORTS SHALL BE BONDED TO THE GROUND RING, IN ACCORDANCE WITH THE NEC.
17. BOND ALL METALLIC OBJECTS WITHIN 6 FT. OF MAIN GROUND WIRES WITH 1–#2 AWG TIN–PLATED COPPER GROUND CONDUCTOR.
18. GROUND CONDUCTORS USED IN THE FACILITY GROUND AND LIGHTNING PROTECTION SYSTEMS SHALL NOT BE ROUTED THROUGH METALLIC OBJECTS THAT FORM A RING AROUND THE CONDUCTOR, SUCH AS METALLIC CONDUITS, METAL SUPPORT CLIPS OR SLEEVES THROUGH WALLS OR FLOORS, WHEN IT IS REQUIRED TO BE HOUSED IN CONDUIT TO MEET CODE REQUIREMENTS OR LOCAL CONDITIONS, NON–METALLIC MATERIAL SUCH AS PVC PLASTIC CONDUIT SHALL BE USED. WHERE USE OF METAL CONDUIT IS UNAVOIDABLE (E.G., NONMETALLIC CONDUIT PROHIBITED BY LOCAL CODE) THE GROUND CONDUCTOR SHALL BE BONDED TO EACH END OF THE METAL CONDUIT.

Eco-Site
240 LEIGH FARM ROAD, SUITE 415
DURHAM, NC 27707

PROJECT INFORMATION:

MARQUETTE DRIVE/IL-0107
LDD PARKING/CH95621D

769 BOLINGBROOK DR.
ROMEOVILLE, IL, 60446
WILL COUNTY
T1505856

CURRENT ISSUE DATE: 01/20/17

ISSUED FOR: REVISION

REV:	DATE:	ISSUED FOR:	BY:
A	10/14/16	FOR CLIENT REVIEW	KLS
B	11/14/16	REVISION	KLS
C	01/20/17	REVISION	KLO

CONSULTANT:
W-T COMMUNICATION DESIGN GROUP, LLC.
WIRELESS INFRASTRUCTURE
2675 Pratum Avenue
Hoffman Estates, Illinois 60192
PH: (224) 293-6333 FAX: (224) 293-6444
www.wtengineering.com
IL. License No.: 184.006042 Exp: 04/30/17

COPYRIGHT © 2017 W-T COMMUNICATION DESIGN GROUP, LLC.

DRAWN BY:	CHK:	APV:
KLS	JKR	JKR

LICENSER:

JEFFERY S. GUTOWSKY
PROFESSIONAL ENGINEER
STATE OF ILLINOIS
LICENSE # 062–047235
EXPIRES: 11/30/2017 SIGNED: / /

SHEET TITLE:

GENERAL NOTES

SHEET NUMBER: **GN-2**

REVISION: **C**

GENERAL REQUIREMENTS:

DETAIL 1 / GN-3

1.1 INTENT

1. THESE SPECIFICATIONS AND CONSTRUCTION DRAWINGS ACCOMPANYING THEM DESCRIBE THE WORK TO BE DONE AND THE MATERIALS TO BE FURNISHED FOR CONSTRUCTION.
2. THE DRAWINGS AND SPECIFICATIONS ARE INTENDED TO BE FULLY EXPLANATORY AND SUPPLEMENTARY. HOWEVER, SHOULD ANYTHING BE SHOWN, INDICATED OR SPECIFIED ON ONE AND NOT THE OTHER, IT SHALL BE DONE THE SAME AS IF SHOWN, INDICATED OR SPECIFIED IN BOTH.
3. THE INTENTION OF THE DOCUMENTS IS TO INCLUDE ALL LABOR AND MATERIALS REASONABLY NECESSARY FOR THE PROPER EXECUTION AND COMPLETION OF THE WORK AS STIPULATED IN THE CONTRACT.
4. THE PURPOSE OF THE SPECIFICATIONS IS TO INTERPRET THE INTENT OF THE DRAWINGS AND TO DESIGNATE THE METHOD OF THE PROCEDURE, TYPE AND QUALITY OF MATERIALS REQUIRED TO COMPLETE THE WORK.
5. MINOR DEVIATIONS FROM THE DESIGN LAYOUT ARE ANTICIPATED AND SHALL BE CONSIDERED AS PART OF THE WORK. NO CHANGES THAT ALTER THE CHARACTER OF THE WORK WILL BE MADE OR PERMITTED BY THE OWNER WITHOUT ISSUING A CHANGE ORDER.

1.2 CONFLICTS

1. THE CONTRACTOR SHALL BE RESPONSIBLE FOR VERIFICATION OF ALL MEASUREMENTS AT THE SITE BEFORE ORDERING ANY MATERIALS OR DOING ANY WORK. NO EXTRA CHARGE OR COMPENSATION SHALL BE ALLOWED DUE TO DIFFERENCE BETWEEN ACTUAL DIMENSIONS AND DIMENSIONS INDICATED ON THE CONSTRUCTION DRAWINGS. ANY SUCH DISCREPANCY IN DIMENSION WHICH MAY BE FOUND SHALL BE SUBMITTED TO THE OWNER FOR CONSIDERATION BEFORE THE CONTRACTOR PROCEEDS WITH THE WORK IN THE AFFECTED AREAS.
2. THE BIDDER, IF AWARDED THE CONTRACT, WILL NOT BE ALLOWED ANY EXTRA COMPENSATION BY REASON OF ANY MATTER OR THING CONCERNING WHICH SUCH BIDDER MIGHT HAVE FULLY INFORMED THEMSELVES PRIOR TO THE BIDDING.
3. NO PLEA OF IGNORANCE OF CONDITIONS THAT EXIST, OR OF DIFFICULTIES OR CONDITIONS THAT MAY BE ENCOUNTERED OR OF ANY OTHER RELEVANT MATTER CONCERNING THE WORK TO BE PERFORMED IN THE EXECUTION OF THE WORK WILL BE ACCEPTED AS AN EXCUSE FOR ANY FAILURE OR OMISSION ON THE PART OF THE CONTRACTOR TO FULFILL EVERY DETAIL OF ALL THE REQUIREMENTS OF THE CONTRACT DOCUMENTS GOVERNING THE WORK.

1.3 CONTRACTS AND WARRANTIES

1. CONTRACTOR IS RESPONSIBLE FOR APPLICATION AND PAYMENT OF CONTRACTOR LICENSES AND BONDS.

1.4 STORAGE

1. ALL MATERIALS MUST BE STORED IN A LEVEL AND DRY FASHION AND IN A MANNER THAT DOES NOT NECESSARILY OBSTRUCT THE FLOW OF OTHER WORK. ANY STORAGE METHOD MUST MEET ALL RECOMMENDATIONS OF THE ASSOCIATED MANUFACTURER.
2. THE BTS MUST BE STORED INSIDE UNTIL THERE IS POWER ON SITE.

1.5 CLEAN UP

1. THE CONTRACTORS SHALL AT ALL TIMES KEEP THE SITE FREE FROM ACCUMULATION OF WASTE MATERIALS OR RUBBISH CAUSED BY THEIR EMPLOYEES AT WORK AND AT THE COMPLETION OF THE WORK, THEY SHALL REMOVE ALL RUBBISH FROM AND ABOUT THE BUILDING AREA, INCLUDING ALL THEIR TOOLS, SCAFFOLDING AND SURPLUS MATERIALS AND SHALL LEAVE THEIR WORK CLEAN AND READY FOR USE.
2. EXTERIOR: VISUALLY INSPECT EXTERIOR SURFACES AND REMOVE ALL TRACES OF SOIL, WASTE MATERIALS, SMUDGES AND OTHER FOREIGN MATTER.
   - A. REMOVE ALL TRACES OF SPLASHED MATERIALS FROM ADJACENT SURFACES.
   - B. IF NECESSARY TO ACHIEVE A UNIFORM DEGREE OF CLEANLINESS, HOSE DOWN THE EXTERIOR OF THE STRUCTURE.
3. INTERIOR: VISUALLY INSPECT INTERIOR SURFACE AND REMOVE ALL TRACES OF SOIL, WASTE MATERIALS, SMUDGES AND OTHER FOREIGN MATTER FROM WALLS/FLOOR/CEILING.
   - A. REMOVE ALL TRACES OF SPLASHED MATERIAL FROM ADJACENT SURFACES.
   - B. REMOVE PAINT DROPPINGS, SPOTS, STAINS AND DIRT FROM FINISHED SURFACES.

GENERAL REQUIREMENTS (CONT.):

1.6 CHANGE ORDER PROCEDURE

1. CHANGE ORDERS MAY BE INITIATED BY THE OWNER AND/OR THE CONTRACTOR INVOLVED. THE CONTRACTOR, UPON VERBAL REQUEST FROM THE OWNER SHALL PREPARE A WRITTEN PROPOSAL DESCRIBING THE CHANGE IN WORK OR MATERIALS AND ANY CHANGES IN THE CONTRACT AMOUNT AND PRESENT TO THE OWNER WITHIN 72 HRS FOR APPROVAL. SUBMIT REQUESTS FOR SUBSTITUTIONS IN THE FORM AND IN ACCORDANCE WITH PROCEDURES REQUIRED FOR CHANGE ORDER PROPOSALS. ANY CHANGES IN SCOPE OF WORK OR MATERIALS WHICH ARE PERFORMED BY THE CONTRACTOR WITHOUT A WRITTEN CHANGE ORDER AS DESCRIBED AND APPROVED BY THE OWNER SHALL PLACE FULL RESPONSIBILITY OF THESE ACTIONS ON THE CONTRACTOR.

1.7 RELATED DOCUMENTS AND COORDINATION

1. GENERAL CARPENTRY, ELECTRICAL AND ANTENNA DRAWINGS ARE INTERRELATED. IN PERFORMANCE OF THE WORK, THE CONTRACTOR MUST REFER TO ALL DRAWINGS. ALL COORDINATION TO BE THE RESPONSIBILITY OF THE CONTRACTOR.

1.8 SHOP DRAWINGS

1. CONTRACTOR SHALL SUBMIT SHOP DRAWINGS AS REQUIRED AND LISTED IN THESE SPECIFICATIONS TO THE OWNER FOR APPROVAL.
2. ALL SHOP DRAWINGS SHALL BE REVIEWED, CHECKED AND CORRECTED BY CONTRACTOR PRIOR TO SUBMITTAL TO THE OWNER.

1.9 PRODUCTS AND SUBSTITUTIONS

1. SUBMIT 3 COPIES OF EACH REQUEST FOR SUBSTITUTION. IN EACH REQUEST IDENTIFY THE PRODUCT OR FABRICATION OR INSTALLATION METHOD TO BE REPLACED BY THE SUBSTITUTION. INCLUDE RELATED SPECIFICATION SECTION AND DRAWING NUMBERS AND COMPLETE DOCUMENTATION SHOWING COMPLIANCE WITH THE REQUIREMENTS FOR SUBSTITUTIONS.
2. SUBMIT ALL NECESSARY PRODUCT DATA AND CUT SHEETS WHICH PROPERLY INDICATE AND DESCRIBE THE ITEMS, PRODUCTS AND MATERIALS BEING INSTALLED. THE CONTRACTOR SHALL, IF DEEMED NECESSARY BY THE OWNER SUBMIT ACTUAL SAMPLES TO THE OWNER FOR APPROVAL IN LIEU OF CUT SHEETS.

1.10 QUALITY ASSURANCE

1. ALL WORK SHALL BE IN ACCORDANCE WITH APPLICABLE LOCAL, STATE AND FEDERAL REGULATIONS. THESE SHALL INCLUDE BUT NOT BE LIMITED TO THE LATEST VERSION OF THE COOK COUNTY BUILDING CODE.

1.11 ADMINISTRATION

1. BEFORE THE COMMENCEMENT OF ANY WORK, THE CONTRACTOR WILL ASSIGN A PROJECT MANAGER WHO WILL ACT AS A SINGLE POINT OF CONTACT FOR ALL PERSONNEL INVOLVED IN THIS PROJECT. THIS PROJECT MANAGER WILL DEVELOP A MASTER SCHEDULE FOR THE PROJECT WHICH WILL BE SUBMITTED TO THE OWNER PRIOR TO THE COMMENCEMENT OF ANY WORK.
2. SUBMIT A BAR TYPE PROGRESS CHART NOT MORE THAN 3 DAYS AFTER THE DATE ESTABLISHED FOR COMMENCEMENT OF THE WORK ON THE SCHEDULE, INDICATING A TIME BAR FOR EACH MAJOR CATEGORY OR UNIT OF WORK TO BE PERFORMED AT SITE, PROPERLY SEQUENCED AND COORDINATED WITH OTHER ELEMENTS OF WORK AND SHOWING COMPLETION OF THE WORK SUFFICIENTLY IN ADVANCE OF THE DATE ESTABLISHED FOR SUBSTANTIAL COMPLETION OF THE WORK.
3. PRIOR TO COMMENCING CONSTRUCTION, THE OWNER SHALL SCHEDULE AN ON-SITE MEETING WITH ALL MAJOR PARTIES. THIS WOULD INCLUDE (THOUGH NOT LIMITED TO) THE OWNER, PROJECT MANAGER, CONTRACTOR, LAND OWNER REPRESENTATIVE, LOCAL TELEPHONE COMPANY, TOWER ERECTION FOREMAN (IF SUBCONTRACTED).
4. CONTRACTOR SHALL BE EQUIPPED WITH SOME MEANS OF CONSTANT COMMUNICATIONS, SUCH AS A MOBILE PHONE OR A BEEPER. THIS EQUIPMENT WILL NOT BE SUPPLIED BY THE OWNER, NOR WILL WIRELESS SERVICE BE ARRANGED.
5. DURING CONSTRUCTION, CONTRACTOR MUST ENSURE THAT EMPLOYEES AND SUBCONTRACTORS WEAR HARD HATS AT ALL TIMES. CONTRACTOR WILL COMPLY WITH ALL SAFETY REQUIREMENTS IN THEIR AGREEMENT.
6. PROVIDE WRITTEN DAILY UPDATES ON SITE PROGRESS TO THE OWNER.
7. COMPLETE INVENTORY OF CONSTRUCTION MATERIALS AND EQUIPMENT IS REQUIRED PRIOR TO START OF CONSTRUCTION.
8. NOTIFY THE OWNER / PROJECT MANAGER IN WRITING NO LESS THAN 48 HOURS IN ADVANCE OF CONCRETE POURS, TOWER ERECTIONS, AND EQUIPMENT CABINET PLACEMENTS.

1.12 INSURANCE AND BONDS

1. CONTRACTOR SHALL AT THEIR OWN EXPENSE CARRY AND MAINTAIN FOR THE DURATION OF THE PROJECT ALL INSURANCE AS REQUIRED AND LISTED AND SHALL NOT COMMENCE WITH THEIR WORK UNTIL THEY HAVE PRESENTED AN ORIGINAL CERTIFICATE OF INSURANCE STATING ALL COVERAGES TO THE OWNER. REFER TO THE MASTER AGREEMENT FOR REQUIRED INSURANCE LIMITS.
2. THE OWNER SHALL BE NAMED AS AN ADDITIONAL INSURED ON ALL POLICIES.
3. CONTRACTOR MUST PROVIDE PROOF OF INSURANCE.

TOWER & ANTENNA INSTALLATION:

DETAIL 2 / GN-3

1.1 WORK INCLUDED

1. IF REQUIRED, ERECT FURNISHED TOWER.
2. GROUND TOWER TEMPORARILY DURING ERECTION. GROUNDING SHALL INCLUDE BASE(S) AND ANCHORS.
3. IF REQUIRED, INSTALL THREE (3) SIDE ARMS, CONSISTING OF THREE (3) 6'-0" AS INDICATED ON DRAWINGS – CONFIRM WITH OWNER REPRESENTATIVE.
4. INSTALL ANTENNAS AS INDICATED ON DRAWINGS AND OWNER SPECIFICATIONS.
5. INSTALL GALVANIZED STEEL ANTENNA MOUNTS AS INDICATED ON DRAWINGS.
6. INSTALL FURNISHED GALVANIZED STEEL WAVEGUIDE LADDER.
7. INSTALL WAVEGUIDE BRIDGE AS INDICATED ON DRAWING.
8. SUPPLY AND INSTALL ONE INSULATED GROUND BAR AT EQUIPMENT CABINET.
9. SUPPLY AND INSTALL GROUNDING STRAP KITS WITH LONG BARREL COMPRESSION LUGS (SIM. TO ANDREW-223700TBD OR APPROVED EQUAL) ATOP TOWER BASE BEFORE ENTERING THE EQUIPMENT. GROUNDING STRAPS TO BE CONNECTED TO INSULATED GROUND BAR.
10. ASSIST OWNER TECHNICIANS IN PERFORMING SWEEP TEST OF INSTALLED COAX.
11. CONCRETE PIERS FOR FOUNDATIONS SHALL BE DRILLED AND POURED ON THE SAME DAY.

1.2 REQUIREMENTS OF REGULATOR AGENCIES

1. FURNISH U.L. LISTED EQUIPMENT WHERE SUCH LABEL IS AVAILABLE, INSTALL IN CONFORMANCE WITH U.L. STANDARDS WHERE APPLICABLE.
2. INSTALL ANTENNA, ANTENNA CABLES, GROUNDING SYSTEM IN ACCORDANCE WITH DRAWINGS AND SPECIFICATION IN EFFECT AT PROJECT LOCATION AND RECOMMENDATIONS OF STATE AND LOCAL BUILDING CODES, SPECIAL CODES HAVING JURISDICTION OVER SPECIFIC PORTIONS OF WORK. THIS INCLUDES BUT IS NOT LIMITED TO THE FOLLOWING:
   - A. TIA – TELECOMMUNICATIONS INDUSTRY ASSOCIATION TIA-222-G. STRUCTURAL STANDARDS FOR STEEL ANTENNA TOWERS AND ANTENNA SUPPORTING STRUCTURES.
   - B. FAA – FEDERAL AVIATION ADMINISTRATION ADVISORY CIRCULAR AC 70/7460-IH, OBSTRUCTION MARKING AND LIGHTING.
   - C. FCC – FEDERAL COMMUNICATIONS COMMISSION RULES AND REGULATIONS FORM 715, OBSTRUCTION MARKING AND LIGHTING SPECIFICATIONS FOR ANTENNA STRUCTURES AND FORM 715A, HIGH INTENSITY OBSTRUCTION LIGHTING SPECIFICATIONS FOR ANTENNA STRUCTURES.
   - D. AISC – AMERICAN INSTITUTE OF STEEL CONSTRUCTION SPECIFICATION FOR STRUCTURAL JOINTS USING ASTM A325 OR A490 BOLTS.
   - E. NEC – NATIONAL ELECTRICAL CODE – ON TOWER LIGHTING KITS.
   - F. UL – UNDERWRITER'S LABORATORIES APPROVED ELECTRICAL PRODUCTS.
   - G. IN ALL CASES, PART 77 OR THE FAA RULES AND PARTS 17 AND 22 OF THE FCC RULES ARE APPLICABLE AND IN THE EVENT OF CONFLICT, SUPERSEDE ANY OTHER STANDARDS OR SPECIFICATIONS.
   - H. 2012 LIFE SAFETY CODE NFPA -101.

811®

Know what's below. Call before you dig.

Eco-Site
240 LEIGH FARM ROAD, SUITE 415
DURHAM, NC 27707

PROJECT INFORMATION:

MARQUETTE DRIVE/IL-0107
LDD PARKING/CH95621D

769 BOLINGBROOK DR.
ROMEOVILLE, IL, 60446
WILL COUNTY
T1505856

CURRENT ISSUE DATE: 01/20/17

ISSUED FOR: REVISION

REV:	DATE:	ISSUED FOR:	BY:
A	10/14/16	FOR CLIENT REVIEW	KLS
B	11/14/16	REVISION	KLS
C	01/20/17	REVISION	KLO

CONSULTANT:
W-T
W-T COMMUNICATION DESIGN GROUP, LLC.
WIRELESS INFRASTRUCTURE
2675 Pratum Avenue
Hoffman Estates, Illinois 60192
PH: (224) 293-6333 FAX: (224) 293-6444
www.wtengineering.com
IL. License No.: 184.006042 Exp: 04/30/17

COPYRIGHT © 2017 W-T COMMUNICATION DESIGN GROUP, LLC.

DRAWN BY:	CHK:	APV:
KLS	JKR	JKR

LICENSER:

JEFFERY S. GUTOWSKY
PROFESSIONAL ENGINEER
STATE OF ILLINOIS
LICENSE # 062-047235
EXPIRES: 11/30/2017 SIGNED: / /

SHEET TITLE: **CARRIER NOTES**

SHEET NUMBER: **GN-3** REVISION: **C**

TOWER SETBACKS TO PROPERTY LINES (FROM TOWER CENTER)	
NORTH	35'-0"
SOUTH	384'-2"
EAST	105'-3"
WEST	55'-2"

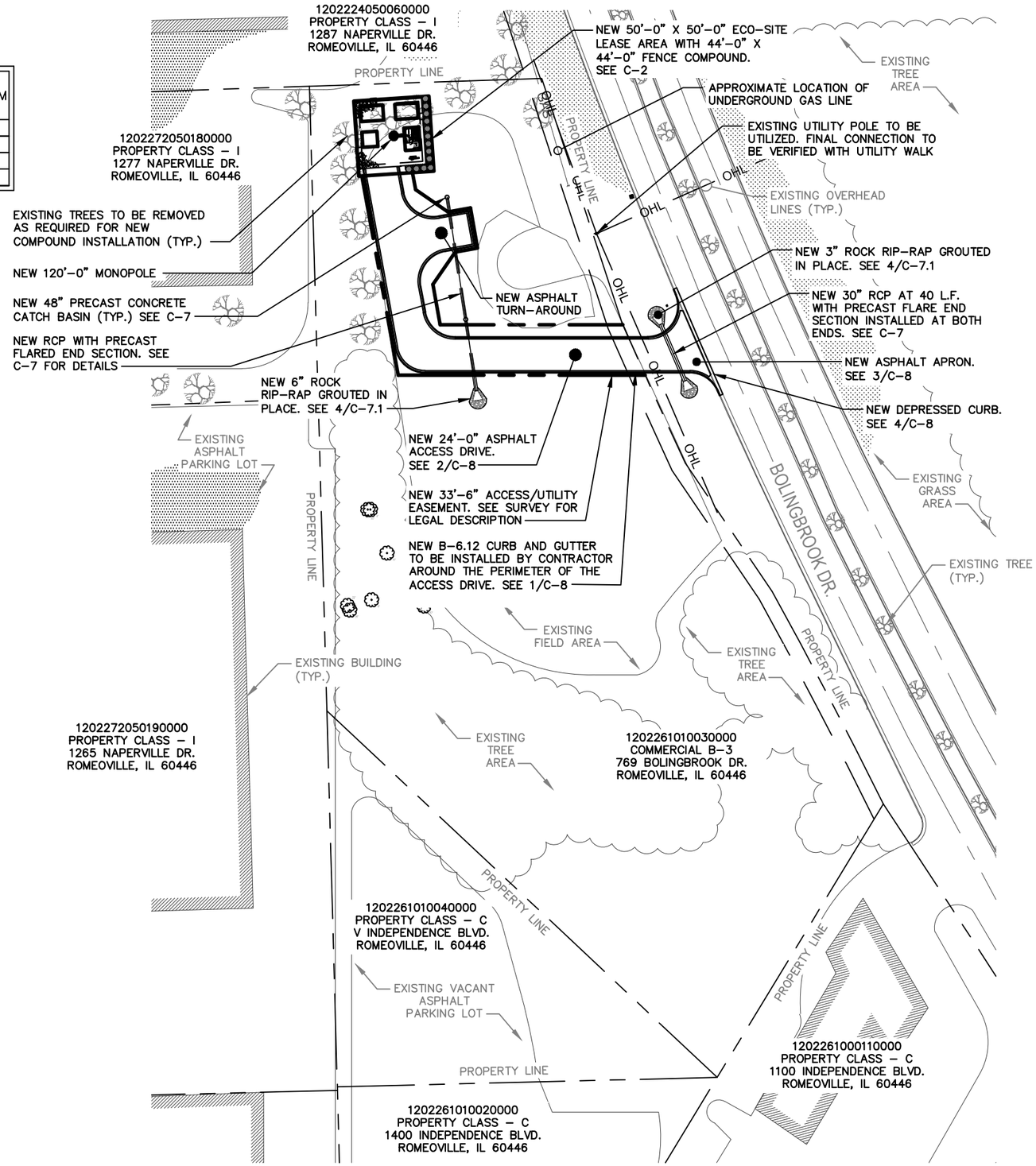

IMPORTANT SITE NOTES:

1. CONTRACTOR WILL NOT START CONSTRUCTION UNTIL AFTER THEY HAVE RECEIVED THE PRE-CON PACKAGE AND HAVE A PRE-CON WALK WITH THE PROJECT MANAGER.
2. CONTRACTOR TO HIRE PUBLIC (811) AND PRIVATE LOCATING SERVICE IN ORDER TO LOCATE AND PROTECT ALL SURFACE UTILITIES. DO NOT SCALE OFF THESE PLANS FOR ANY BELOW GRADE UTILITIES
3. CONTRACTOR SHALL VERIFY ALL EXISTING BURIED AND OVERHEAD UTILITIES PRIOR TO EXCAVATION. CONTRACTOR SHALL REPAIR ALL DAMAGED UTILITIES AT HIS OWN COST AND COORDINATE ANY REPAIRS WITH RESPECTIVE UTILITY COMPANY.
4. CONTRACTOR TO VERIFY ALL HEIGHTS AND AZIMUTHS IN FIELD PRIOR TO CONSTRUCTION. CONTRACTOR SHALL NOTIFY T-MOBILE AND ENGINEERING FIRM OF ANY DISCREPANCIES BEFORE PROCEEDING.
5. CONTRACTOR SHALL RESTORE AND REPAIR ANY DAMAGED AREAS CAUSED BY CONSTRUCTION.

SURVEY NOTE:

1. ECO-SITE STAFF SHALL COORDINATE WITH THE PROPERTY OWNER TO OBTAIN THE PROPER EASEMENT AGREEMENTS TO CONSTRUCT AND MAINTAIN EQUIPMENT IN AND AROUND THE TOWER COMPOUND.
2. PROPOSED COMPOUND LAYOUT BASED ON SURVEY PROVIDED BY W-T LAND SURVEYING, INC. DATED 11/14/16 AND SITE VISIT ON 02/03/16.

OVERALL SITE PLAN

SCALE: 1" = 80'-0" (1" = 40'-0" ON 24"X36" SHEET)

1

Eco-Site
240 LEIGH FARM ROAD, SUITE 415
DURHAM, NC 27707

PROJECT INFORMATION:

MARQUETTE DRIVE/IL-0107
LDD PARKING/CH95621D

769 BOLINGBROOK DR.
ROMEOVILLE, IL, 60446
WILL COUNTY

T1505856

CURRENT ISSUE DATE:

01/20/17

ISSUED FOR:

REVISION

REV:	DATE:	ISSUED FOR:	BY:
A	10/14/16	FOR CLIENT REVIEW	KLS
B	11/14/16	REVISION	KLS
C	01/20/17	REVISION	KLO

CONSULTANT:

W-T
W-T COMMUNICATION DESIGN GROUP, LLC.
WIRELESS INFRASTRUCTURE
2675 Pratum Avenue
Hoffman Estates, Illinois 60192
PH: (224) 293-6333 FAX: (224) 293-6444
www.wtengineering.com
IL. License No.: 184.006042 Exp: 04/30/17

COPYRIGHT © 2017 W-T COMMUNICATION DESIGN GROUP, LLC.

DRAWN BY:	CHK:	APV:
KLS	JKR	JKR

LICENSER:

JEFFERY S. GUTOWSKY
PROFESSIONAL ENGINEER
STATE OF ILLINOIS
LICENSE # 062-047235
EXPIRES: 11/30/2017 SIGNED: / /

SHEET TITLE:

OVERALL SITE PLAN

SHEET NUMBER: C-1

REVISION: C

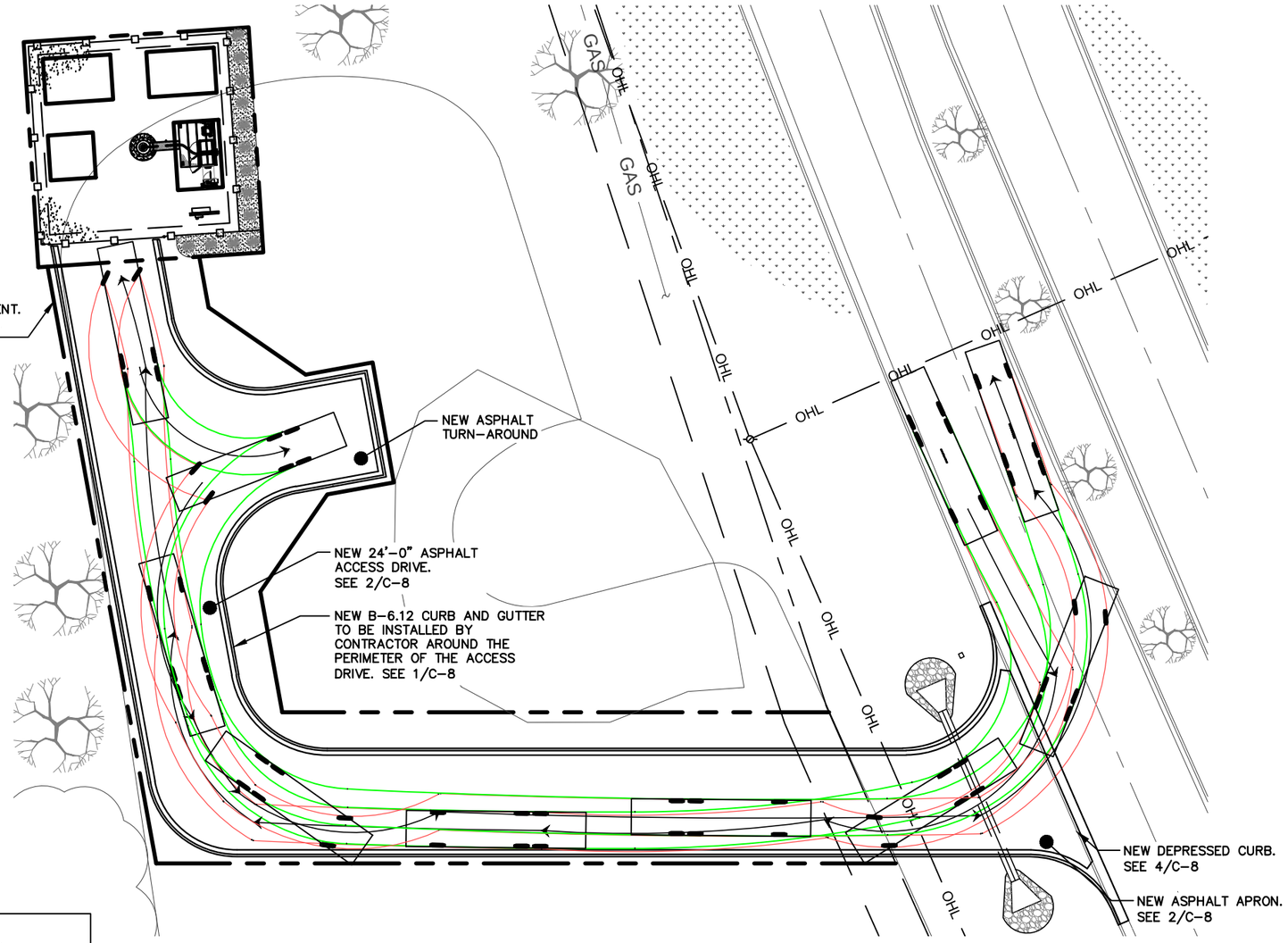

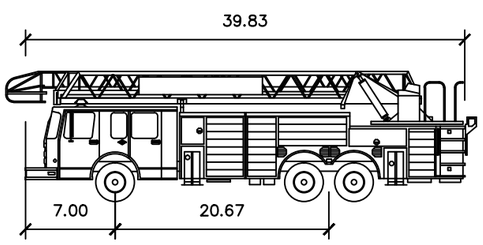

FIRE TRUCK	FEET
WIDTH	: 8.00
TRACK	: 8.08
LOCK TO LOCK TIME	: 6.0
STEERING ANGLE	: 37.0

TRUCK ELEVATION

SCALE: NONE

1

0 30 60 90

GRAPHIC SCALE: 1" = 30'

ACCESS ROAD TURNING MOVEMENT PLAN

SCALE: 1" = 30'-0" (1" = 15'-0" ON 24"X36" SHEET)

2

N

Eco-Site

240 LEIGH FARM ROAD, SUITE 415
DURHAM, NC 27707

PROJECT INFORMATION:

MARQUETTE DRIVE/IL-0107
LDD PARKING/CH95621D

769 BOLINGBROOK DR.
ROMEOVILLE, IL, 60446
WILL COUNTY

T1505856

CURRENT ISSUE DATE:

01/20/17

ISSUED FOR:

REVISION

REV:	DATE:	ISSUED FOR:	BY:
A	10/14/16	FOR CLIENT REVIEW	KLS
B	11/14/16	REVISION	KLS
C	01/20/17	REVISION	KLO

CONSULTANT:

W-T COMMUNICATION DESIGN GROUP, LLC.
WIRELESS INFRASTRUCTURE
2675 Pratum Avenue
Hoffman Estates, Illinois 60192
PH: (224) 293-6333 FAX: (224) 293-6444
www.wtengineering.com
IL. License No.: 184.006042 Exp: 04/30/17

COPYRIGHT © 2017 W-T COMMUNICATION DESIGN GROUP, LLC.

DRAWN BY:	CHK:	APV:
KLS	JKR	JKR

LICENSER:

JEFFERY S. GUTOWSKY
PROFESSIONAL ENGINEER
STATE OF ILLINOIS
LICENSE # 062-047235
EXPIRES: 11/30/2017 SIGNED: / /

SHEET TITLE:

ACCESS ROAD TURNING MOVEMENT PLAN

SHEET NUMBER: C-1.1

REVISION: C

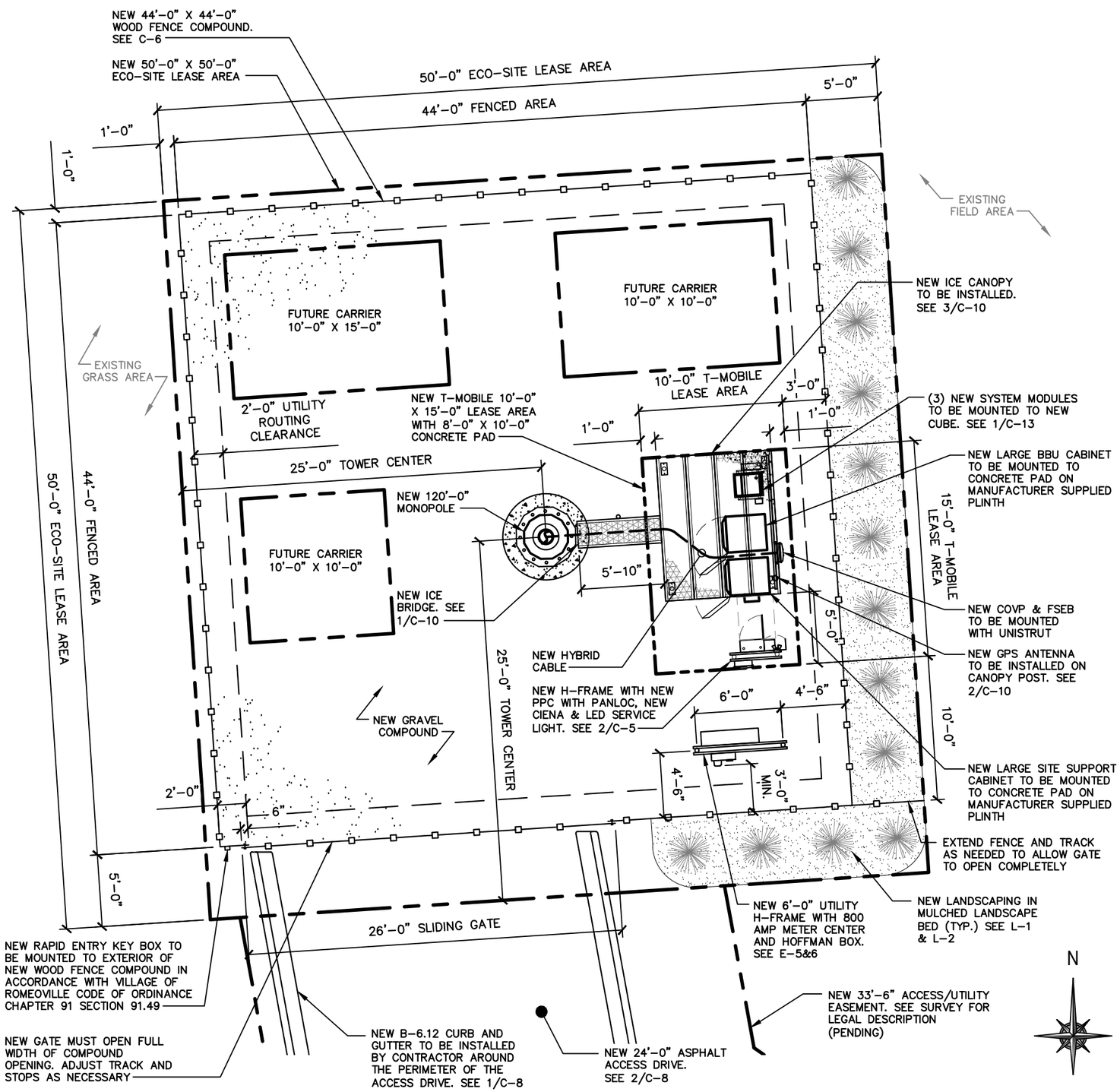

GENERAL NOTES:

1. ALL MATERIALS AND WORKMANSHIP SHALL CONFORM TO THE DRAWINGS AND SPECIFICATIONS. ALL WORK SHALL BE DONE IN ACCORDANCE WITH THE LATEST EDITION OF THE STATE, LOCAL AND NATIONAL CODES, ORDINANCES AND OR REGULATIONS APPLICABLE TO THIS PROJECT.
2. THE CONTRACTOR SHALL BE RESPONSIBLE FOR COORDINATING THE WORK OF ALL TRADES AND SHALL CHECK ALL DIMENSIONS. ALL DISCREPANCIES SHALL BE CALLED TO THE ATTENTION OF THE ECO-SITE CONSTRUCTION MANAGER AND/OR ENGINEER AND BE RESOLVED BEFORE PROCEEDING WITH WORK. WHERE THERE IS A CONFLICT BETWEEN DRAWING AND ECO-SITE SPECIFICATIONS, THE ECO-SITE CONSTRUCTION MANAGER SHOULD BE CONTACTED FOR CLARIFICATION.
3. ALL INFORMATION SHOWN ON THE DRAWINGS RELATIVE TO EXISTING CONDITIONS IS GIVEN AS THE BEST PRESENT KNOWLEDGE, BUT WITHOUT GUARANTEE OF ACCURACY. WHERE ACTUAL CONDITIONS CONFLICT WITH THE DRAWINGS, THEY SHALL BE REPORTED TO THE ECO-SITE CONSTRUCTION MANAGER AND/OR ENGINEER SO THAT PROPER REVISIONS MAY BE MADE. MODIFICATION OF DETAILS OF CONSTRUCTION SHALL NOT BE MADE WITHOUT WRITTEN APPROVAL OF THE CONSTRUCTION MANAGER AND/OR ENGINEER.
4. CONTRACTOR SHALL REVIEW AND BE FAMILIAR WITH SITE CONDITIONS AS SHOWN ON THE ATTACHED SITE PLAN AND/OR SURVEY DRAWINGS.
5. WAVEGUIDE BRIDGE AND PRE-FAB SHELTER ARE SHOWN FOR REFERENCE ONLY. REFER TO SEPARATE PRE-ENGINEERED DRAWINGS FOR SPECIFIC INFORMATION INCLUDING FOOTINGS AND WAVEGUIDE BRIDGE LOCATION.
6. ALL FINISHED GRADES SHALL SLOPE MINIMUM 1/4 IN./FT. AWAY FROM EQUIPMENT IN ALL DIRECTIONS. CONTRACTOR SHALL SLOPE SWALES AS REQUIRED ALONG EXISTING TERRAIN TO DRAIN AWAY FROM COMPOUND AND ACCESS DRIVE.
7. THE PROPOSED TOWER AND TOWER FOUNDATIONS WERE DESIGNED BY OTHERS. TOWER INFORMATION PROVIDED ON THESE PLANS ARE PROVIDED FOR REFERENCE PURPOSES ONLY. TOWER DIMENSIONS SHOWN ON THIS PLAN ARE FOR TOWER CENTER LOCATION. CAISSONS AND TOWER SHOWN ON THIS PLAN ARE ILLUSTRATIVE, SEE DESIGN DRAWINGS BY OTHERS. DO NOT SCALE. NOTIFY ENGINEER OR ECO-SITE CONSTRUCTION MANAGER OF ANY CONFLICTS OR DISCREPANCIES. CONTRACTOR TO OBTAIN COPY OF TOWER DESIGN DRAWINGS FROM ECO-SITE CONSTRUCTION MANAGER TO CONFIRM COAX ROUTING AND ANTENNA MOUNT INFORMATION.
8. THE CONTRACTOR SHALL PROVIDE ADEQUATE EXCAVATION SLOPING, SHORING, BRACING, AND GUYS IN ACCORDANCE WITH ALL NATIONAL, STATE, AND LOCAL SAFETY ORDINANCES.
9. UPON COMPLETION OF CONSTRUCTION, CONTRACTOR IS RESPONSIBLE FOR REPAIRING ANY DAMAGE CAUSED BY CONSTRUCTION ACTIVITIES TO THE EXISTING ACCESS ROAD AND COMPOUND GRAVEL AREAS. ANY NEW FILL MATERIALS SHALL BE COMPACTED.
10. THE CONTRACTOR IS HEREBY NOTIFIED THAT PRIOR TO COMMENCING CONSTRUCTION, HE IS RESPONSIBLE FOR CONTACTING THE UTILITY COMPANIES INVOLVED AND SHALL REQUEST A VERIFICATION AT THE CONSTRUCTION SITE OF THE LOCATIONS OF THEIR UNDERGROUND UTILITIES AND WHERE THEY MAY POSSIBLY CONFLICT WITH THE PLACEMENT OF IMPROVEMENTS AS SHOWN ON THESE PLANS. THE CONTRACTOR OR ANY SUBCONTRACTOR FOR THIS CONTRACT WILL BE REQUIRED TO NOTIFY "STATE 811" 48 NUMBER OF HOURS IN ADVANCE OF PERFORMING ANY WORK BY CALLING THE TOLL FREE NUMBER (800)-892-0123. ANY UTILITIES DAMAGED BY CONSTRUCTION ACTIVITIES SHALL BE REPAIRED BY THE CONTRACTOR, AT NO EXPENSE TO THE OWNER.
11. CONTRACTOR TO PROVIDE DUMPSTER AND PORTABLE TOILET FACILITY DURING CONSTRUCTION.
12. CONTRACTOR TO PROVIDE STYMIE LOCK OR EQUIVALENT AS APPROVED BY ECO-SITE CONSTRUCTION MANAGER.

SURVEY NOTE:

1. ECO-SITE STAFF SHALL COORDINATE WITH THE PROPERTY OWNER TO OBTAIN THE PROPER EASEMENT AGREEMENTS TO CONSTRUCT AND MAINTAIN EQUIPMENT IN AND AROUND THE TOWER COMPOUND.
2. PROPOSED COMPOUND LAYOUT BASED ON SURVEY PROVIDED BY W-T LAND SURVEY, INC. DATED 11/14/16 AND SITE VISIT ON 02/03/16.

COAX NOTE:

1. ROUTE COAX UP TOWER PER TOWER DESIGN DRAWING BY TOWER OWNER.

SITE PLAN | 1

SCALE: 1/8" = 1'-0" (1" = 1/4" ON 24'X36" SHEET)

Eco-Site
240 LEIGH FARM ROAD, SUITE 415
DURHAM, NC 27707

PROJECT INFORMATION:

MARQUETTE DRIVE/IL-0107
LDD PARKING/CH95621D

769 BOLINGBROOK DR.
ROMEOVILLE, IL, 60446
WILL COUNTY
T1505856

CURRENT ISSUE DATE: 01/20/17

ISSUED FOR: REVISION

REV:	DATE:	ISSUED FOR:	BY:
A	10/14/16	FOR CLIENT REVIEW	KLS
B	11/14/16	REVISION	KLS
C	01/20/17	REVISION	KLO

CONSULTANT:

W-T COMMUNICATION DESIGN GROUP, LLC.
WIRELESS INFRASTRUCTURE
2675 Pratum Avenue
Hoffman Estates, Illinois 60192
PH: (224) 293-6333 FAX: (224) 293-6444
www.wtengineering.com
IL. License No.: 184.006042 Exp: 04/30/17

COPYRIGHT © 2017 W-T COMMUNICATION DESIGN GROUP, LLC.

DRAWN BY:	CHK:	APV:
KLS	JKR	JKR

LICENSER:

JEFFERY S. GUTOWSKY
PROFESSIONAL ENGINEER
STATE OF ILLINOIS
LICENSE # 062-047235
EXPIRES: 11/30/2017 SIGNED: / /

SHEET TITLE: **SITE PLAN**

SHEET NUMBER: **C-2** REVISION: **C**

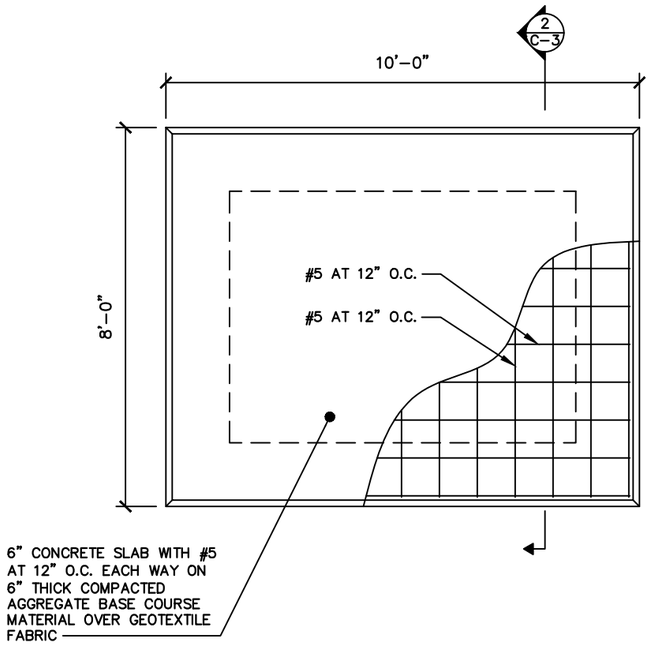

EQUIPMENT PAD FOUNDATION PLAN

SCALE: NONE

1

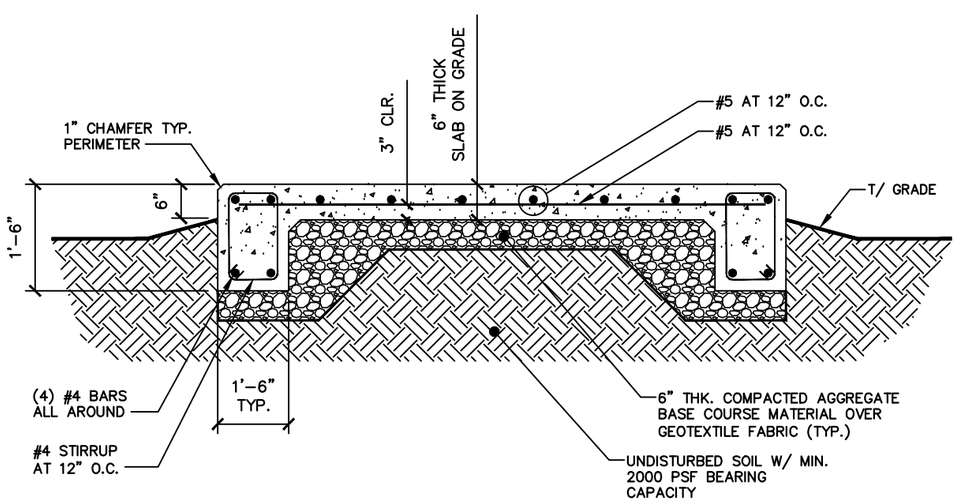

EQUIPMENT PAD FOUNDATION

SCALE: NONE

2

STRUCTURAL GENERAL NOTES

1.0 GENERAL CONDITIONS

1.1 DESIGN AND CONSTRUCTION OF ALL WORK SHALL CONFORM TO THE INTERNATIONAL BUILDING CODE, ACI 318–05, AND STEEL CONSTRUCTION MANUAL 13TH EDITION. IN CASE OF CONFLICT BETWEEN THE CODES, STANDARDS, REGULATIONS, SPECIFICATIONS, GENERAL NOTES AND/OR MANUFACTURER'S REQUIREMENTS, USE THE MOST STRINGENT PROVISION.

1.2 IT IS THE EXPRESSED INTENT OF PARTIES INVOLVED IN THIS PROJECT THAT THE CONTRACTOR OR SUBCONTRACTOR OR INDEPENDENT CONTRACTOR OR THE RESPECTIVE EMPLOYEES SHALL EXCULPATE THE ARCHITECT/ENGINEER, CONSTRUCTION MANAGER, THE OWNER, AND THEIR AGENTS FROM ANY LIABILITY WHATSOEVER AND HOLD THEM HARMLESS AGAINST LOSS, DAMAGES, LIABILITY OR ANY EXPENSE ARISING IN ANY MATTER FROM THE WRONGFUL OR NEGLIGENT ACT, OR FAILURE TO CARRY METHODS, TECHNIQUES OR PROCEDURES OR FAILURE TO CONFORM TO THE STATE SCAFFOLDING ACT IN CONNECTION WITH THE WORK.

1.3 DO NOT SCALE DRAWINGS.

1.4 VERIFY ALL EQUIPMENT MOUNTING DIMENSIONS PER MANUFACTURER DRAWINGS. SEE MANUFACTURER ENCLOSURE CONNECTION DETAILS TO FOUNDATIONS.

1.5 SUBMIT ONE SEPIA AND TWO PRINTS OF ALL STRUCTURAL SHOP DRAWINGS. MARKED UP SEPIA SHALL BE RETURNED.

1.6 DESIGN LOADS ARE:
DEAD LOAD OF EQUIPMENT CABINETS:.....MAX. 10,000 LBS

2.0 A GEOTECHNICAL REPORT WAS NOT PROVIDED. FOUNDATIONS ARE DESIGNED FOR AN ASSUMED MINIMUM SOIL BEARING CAPACITY OF 2000 PSF. A GEOTECHNICAL INVESTIGATION SHOULD BE PERFORMED PRIOR TO CONSTRUCTION. IF SOIL BEARING CAPACITY IS LESS THAN WHAT IS SPECIFIED HERE, CONTACT ARCHITECT/ENGINEER FOR A REDESIGN.

3.0 CONCRETE

3.1 MEET OR EXCEED THE FOLLOWING CODES AND STANDARDS:
–DESIGN.....ACI 318–05
–CONSTRUCTION.....ACI 301
–DETAILING.....CRSI MANUAL OF STANDARD PRACTICE
–REINF. STEEL.....ASTM A 615 GRADE 60, DEFORMED
–MIXING.....ASTM C 94. READY MIX CONCRETE
–AIR ENTRAINMENT.....ACI 318 AND ASTM C–260
–AGGREGATE.....ASTM C 33 AND C 330 (FOR LIGHT WEIGHT)

3.2 CONCRETE STRENGTH AT 28 DAYS SHALL BE 4000 PSI MINIMUM.

3.3 DO NOT FIELD BEND OR WELD TO GRADE 60 REINFORCED STEEL.

3.4 PROVIDE AIR ENTRAINED CONCRETE WITH AIR CONTENT OF 5 TO 7% FOR ALL CONCRETE EXPOSED TO EARTH OR WEATHER.

3.5 MAXIMUM AGGREGATE SIZE: 3/4" FOR FOOTINGS, WALLS, BEAMS, SLABS AND COLUMNS: 3/8" FOR CONCRETE TOPPING. DO NOT USE ANY ADMIXTURE WHICH HAS CALCIUM CHLORIDE OR WATER.

3.6 MINIMUM COVER FOR REINFORCING STEEL UNLESS INCREASED COVER IS NECESSARY TO MEET FIRE RATINGS INDICATED:
–CAST AGAINST AND EXPOSED EARTH.....3"
–EXPOSED TO EARTH AND WEATHER, #11 TO #6 BARS.....2"
–EXPOSED TO EARTH AND WEATHER, #5 OR SMALLER.....1–1/2"
–INTERIOR EXPOSURE, BEAMS AND COLUMNS.....1–1/2"
–INTERIOR EXPOSURE, SLABS, WALLS AND JOISTS.....3/4"

4.0 COMPACTION: THE STRUCTURAL FILL MATERIAL SHALL BE WELL GRADED GRANULAR SOIL AND SHALL BE PLACED IN LAYERS OF 8 INCHES. EACH LAYER SHALL BE COMPACTED TO A MINIMUM OF 98% COMPACTION BASED ON ASTM D–1557 PRIOR TO SUCCEEDING LAYERS.

FOUNDATION NOTES

SCALE: NONE

3

Eco-Site
240 LEIGH FARM ROAD, SUITE 415
DURHAM, NC 27707

PROJECT INFORMATION:

MARQUETTE DRIVE/IL-0107
LDD PARKING/CH95621D

769 BOLINGBROOK DR.
ROMEOVILLE, IL, 60446
WILL COUNTY

T1505856

CURRENT ISSUE DATE:

01/20/17

ISSUED FOR:

REVISION

REV:	DATE:	ISSUED FOR:	BY:
A	10/14/16	FOR CLIENT REVIEW	KLS
B	11/14/16	REVISION	KLS
C	01/20/17	REVISION	KLO

CONSULTANT:

W-T
W-T COMMUNICATION DESIGN GROUP, LLC.
WIRELESS INFRASTRUCTURE
2675 Pratum Avenue
Hoffman Estates, Illinois 60192
PH: (224) 293-6333 FAX: (224) 293-6444
www.wtengineering.com
IL. License No.: 184.006042 Exp: 04/30/17

COPYRIGHT © 2017 W-T COMMUNICATION DESIGN GROUP, LLC.

DRAWN BY:	CHK:	APV:
KLS	JKR	JKR

LICENSER:

JEFFERY S. GUTOWSKY
PROFESSIONAL ENGINEER
STATE OF ILLINOIS
LICENSE # 062–047235
EXPIRES: 11/30/2017 SIGNED: / /

SHEET TITLE:

CARRIER EQUIPMENT PAD DETAILS

SHEET NUMBER: C-3

REVISION: C

NOTE:
ALL UNISTRUT, FASTENERS, HARDWARE, ETC, ARE TO BE EITHER HOT-DIPPED GALVANIZED OR STAINLESS STEEL. GENERAL CONTRACTOR IS NOT TO USE ZINC-PLATED OR PRE-GALVANIZED.

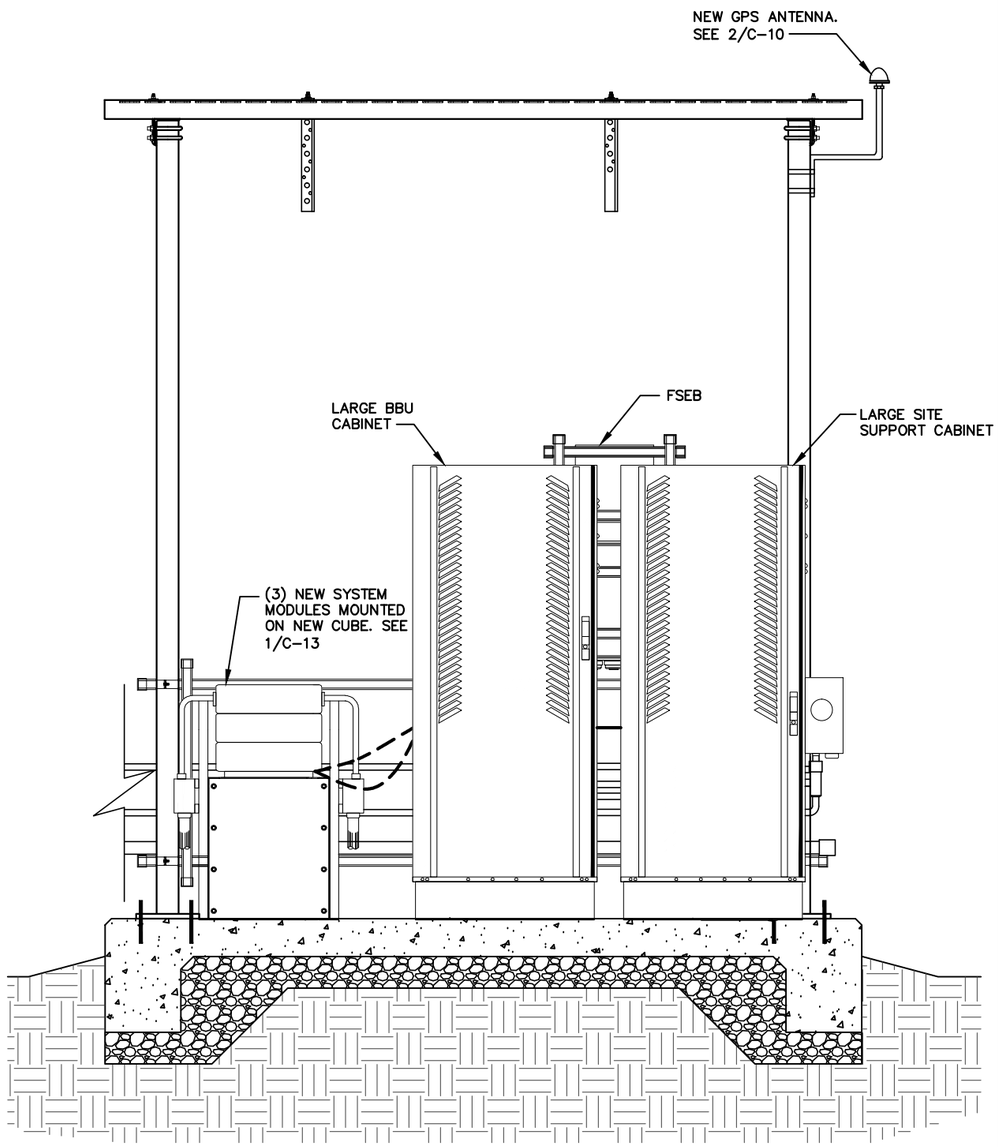

FRONT EQUIPMENT ELEVATION

SCALE: 1/2" = 1'-0" (1" = 1'-0" ON 24'X36" SHEET)

1

NEW 8'-0" X 10'-0" ICE CANOPY W/ BASE SHOE LEGS COMMSCOPE PART # IC-0810-S. MOUNT TO PAD PER MANUFACTURER REQUIREMENTS.

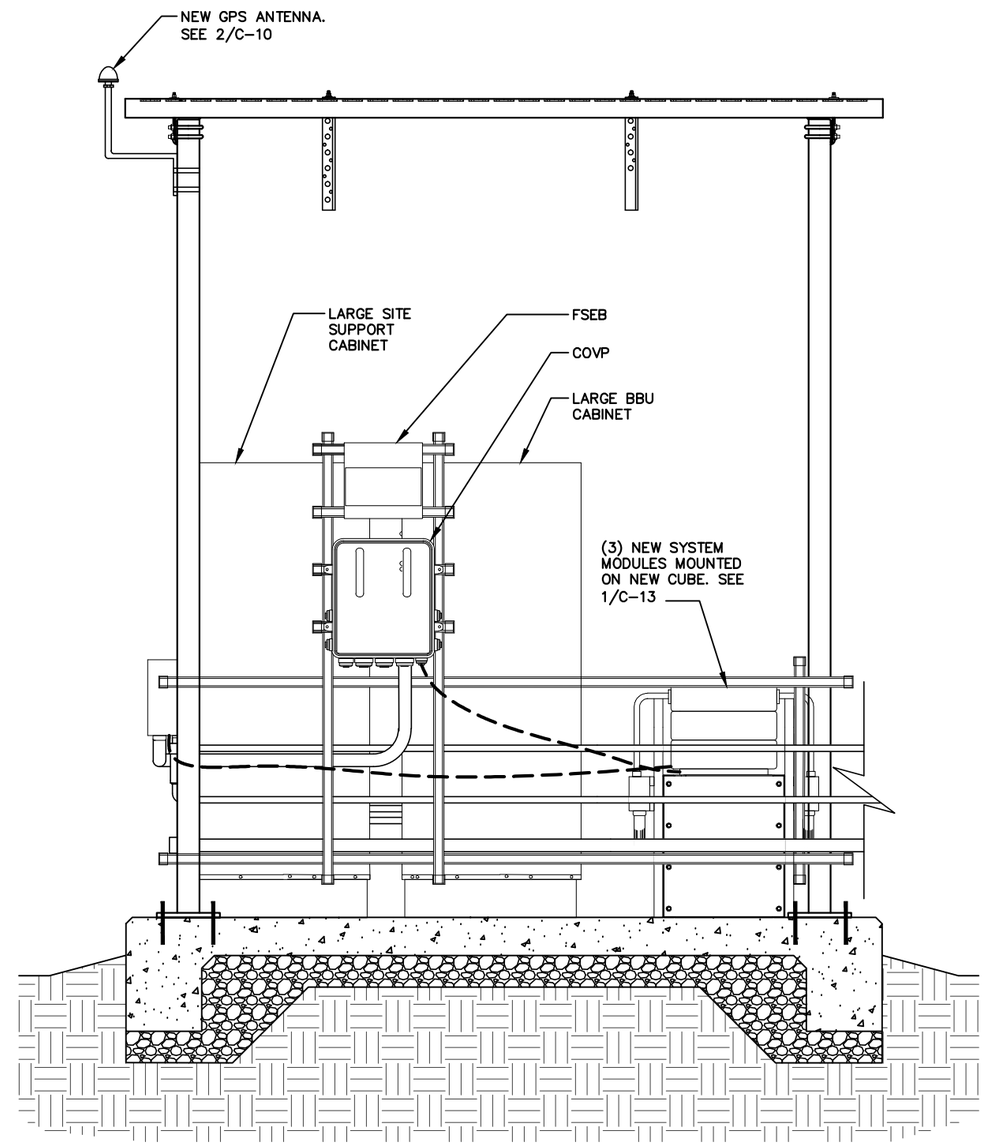

REAR EQUIPMENT ELEVATION

SCALE: 1/2" = 1'-0" (1" = 1'-0" ON 24'X36" SHEET)

2

Eco-Site
240 LEIGH FARM ROAD, SUITE 415
DURHAM, NC 27707

PROJECT INFORMATION:

MARQUETTE DRIVE/IL-0107
LDD PARKING/CH95621D

769 BOLINGBROOK DR.
ROMEOVILLE, IL, 60446
WILL COUNTY

T1505856

CURRENT ISSUE DATE:

01/20/17

ISSUED FOR:

REVISION

REV:	DATE:	ISSUED FOR:	BY:
A	10/14/16	FOR CLIENT REVIEW	KLS
B	11/14/16	REVISION	KLS
C	01/20/17	REVISION	KLO

CONSULTANT:

W-T COMMUNICATION DESIGN GROUP, LLC.
WIRELESS INFRASTRUCTURE
2675 Pratum Avenue
Hoffman Estates, Illinois 60192
PH: (224) 293-6333 FAX: (224) 293-6444
www.wtengineering.com
IL. License No.: 184.006042 Exp: 04/30/17

COPYRIGHT © 2017 W-T COMMUNICATION DESIGN GROUP, LLC.

DRAWN BY:	CHK:	APV:
KLS	JKR	JKR

LICENSER:

JEFFERY S. GUTOWSKY
PROFESSIONAL ENGINEER
STATE OF ILLINOIS
LICENSE # 062-047235
EXPIRES: 11/30/2017 SIGNED: / /

SHEET TITLE:

EQUIPMENT ELEVATIONS

SHEET NUMBER: **C-4**

REVISION: **C**

NOTE:
ALL UNISTRUT, FASTENERS, HARDWARE, ETC, ARE TO BE EITHER HOT-DIPPED GALVANIZED OR STAINLESS STEEL. GENERAL CONTRACTOR IS NOT TO USE ZINC-PLATED OR PRE-GALVANIZED.

NOTE:
SOIL PROPERTY SHALL BE CLAY/SANDY SOILS, WITH MINIMUM SOIL BEARING CAPACITY OF 2000 PSI

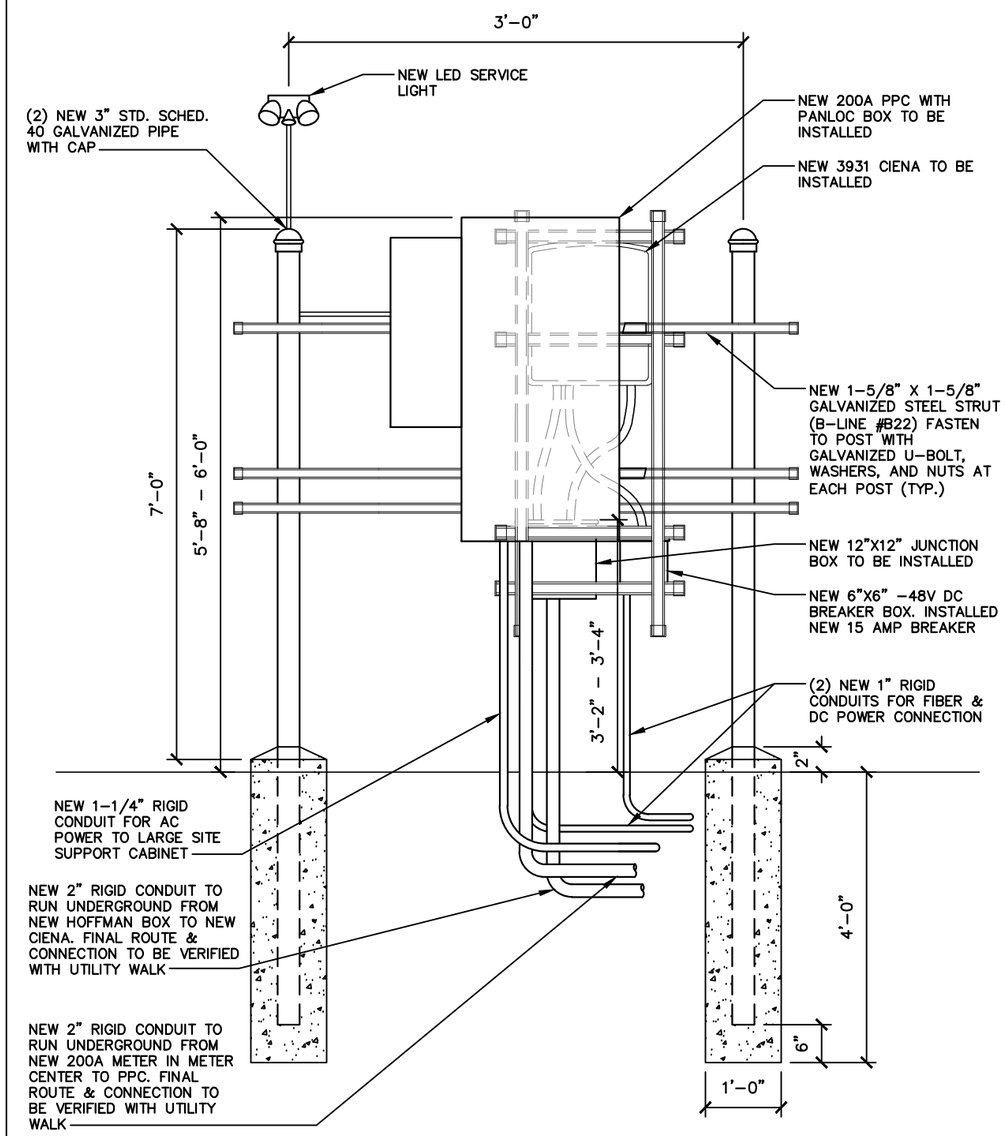

DETAIL NOT USED | 1

SCALE: NONE

CARRIER H-FRAME DETAIL | 2

SCALE: NONE

Eco-Site
240 LEIGH FARM ROAD, SUITE 415
DURHAM, NC 27707

PROJECT INFORMATION:

MARQUETTE DRIVE/IL-0107
LDD PARKING/CH95621D

769 BOLINGBROOK DR.
ROMEOVILLE, IL, 60446
WILL COUNTY

T1505856

CURRENT ISSUE DATE:

01/20/17

ISSUED FOR:

REVISION

REV:	DATE:	ISSUED FOR:	BY:
A	10/14/16	FOR CLIENT REVIEW	KLS
B	11/14/16	REVISION	KLS
C	01/20/17	REVISION	KLO

CONSULTANT:

W-T
W-T COMMUNICATION DESIGN GROUP, LLC.
WIRELESS INFRASTRUCTURE
2675 Pratum Avenue
Hoffman Estates, Illinois 60192
PH: (224) 293-6333 FAX: (224) 293-6444
www.wtengineering.com
IL. License No.: 184.006042 Exp: 04/30/17

COPYRIGHT © 2017 W-T COMMUNICATION DESIGN GROUP, LLC.

DRAWN BY:	CHK:	APV:
KLS	JKR	JKR

LICENSER:

JEFFERY S. GUTOWSKY
PROFESSIONAL ENGINEER
STATE OF ILLINOIS
LICENSE # 062-047235
EXPIRES: 11/30/2017 SIGNED: / /

SHEET TITLE:

EQUIPMENT ELEVATIONS

SHEET NUMBER: **C-5**

REVISION: **C**

FENCE NOTES

1. USE 3000-PSI CONCRETE, FULLY CONSOLIDATED AROUND THE POST.
2. WHERE THE POST IS SET IN ROCK OR CONCRETE, CORE A HOLE 12" DEEP AND 1" LARGER IN DIAMETER THAN THE POST. SET THE POST AND GROUT IN PLACE USING NON-SHRINK GROUT.
3. ALL POSTS MUST BE PLUMB AND ALIGNED WITH ONE ANOTHER IN BOTH HORIZONTAL AND VERTICAL PLANES.
4. CORNER AND GATEPOSTS FOR CHAIN LINK FENCES SHALL EXTEND ABOVE THE TOP STRAND OF BARBED WIRE TO PROVIDE TENSIONING FOR THE BARBED WIRE.
5. PROVIDE MIDRAILS AND BRACING AT ALL CORNER POSTS WHERE THE FENCE CHANGES DIRECTION BY MORE THAN 30 DEGREES.
6. THE GRADE OF THE SITE AND INSTALLATION OF THE FENCE SHALL PROVIDE FOR NO MORE THAN A 1" GAP BETWEEN THE BOTTOM OF THE FENCE MATERIAL AND FINISH GRADE.
7. CONTRACTOR SHALL PROVIDE HOLD OPEN DEVICES FOR ALL GATES AT THE SPECIFIED OPEN POSITIONS, DRIVEN PIPE TYPE RECEIVERS ARE NOT AUTHORIZED.
8. ALL WOOD SHALL BE SOUTHERN YELLOW PINE OR SPRUCE PINE FIR, NO. 2 OR BTR AND PRESSURE TREATED.

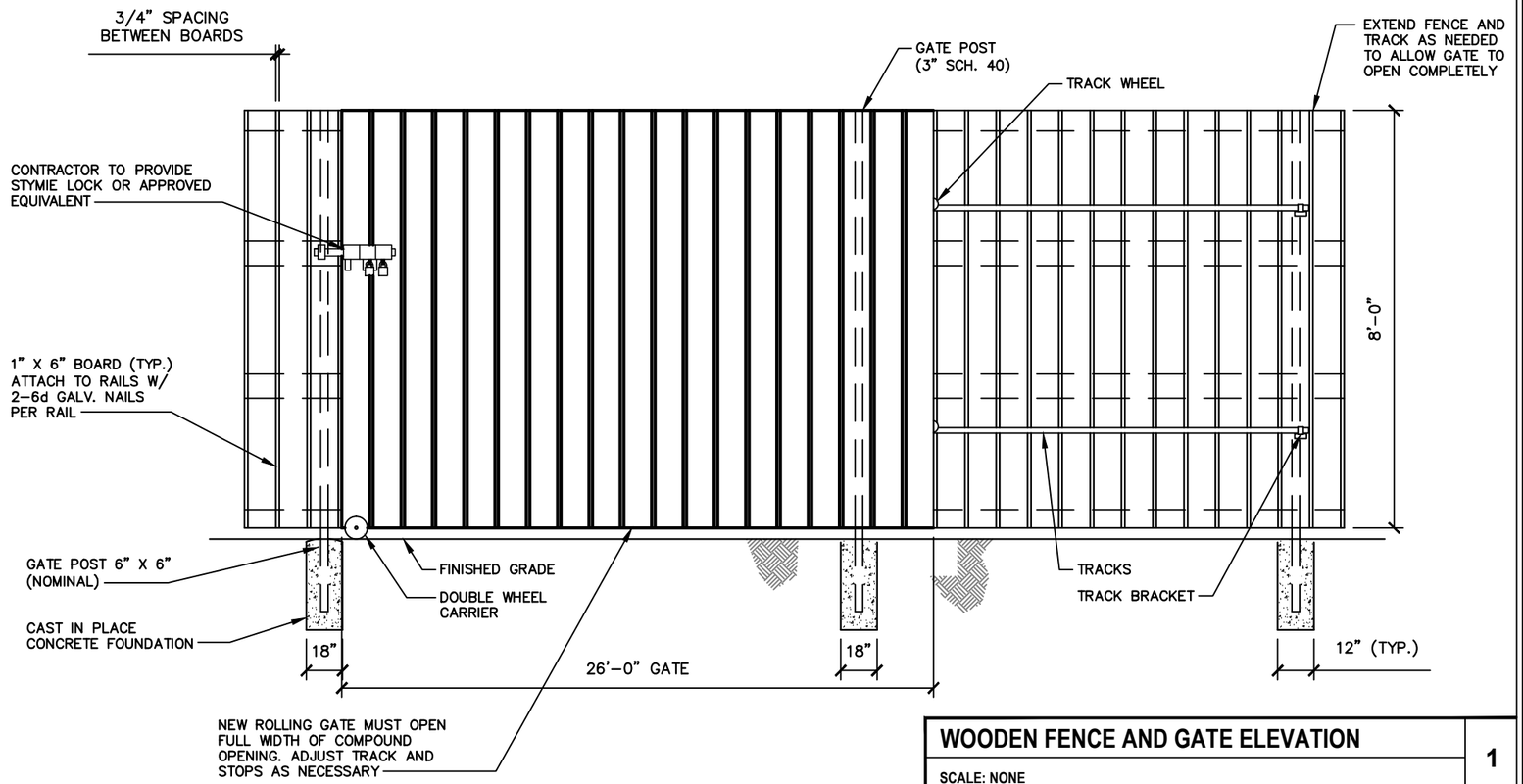

WOODEN FENCE AND GATE ELEVATION — 1

SCALE: NONE

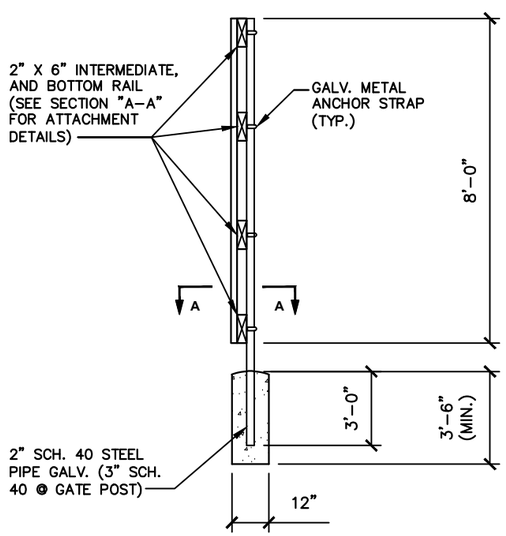

SIDE ELEVATION VIEW — 2

SCALE: NONE

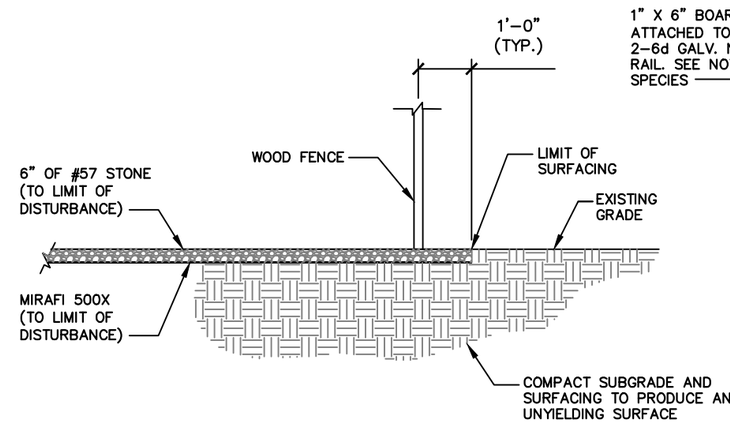

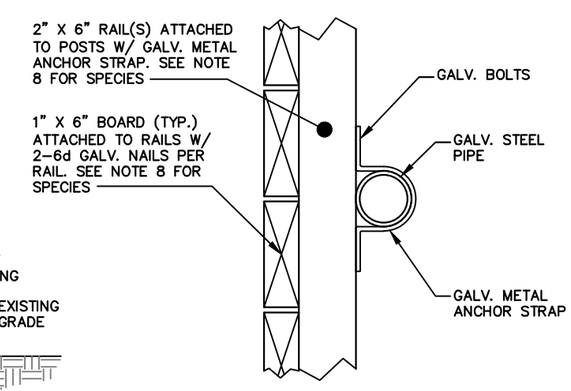

SECTION "A-A"

NOT TO SCALE

SITE COMPOUND SURFACE DETAIL — 3

SCALE: NONE

Eco-Site
240 LEIGH FARM ROAD, SUITE 415
DURHAM, NC 27707

PROJECT INFORMATION:

MARQUETTE DRIVE/IL-0107
LDD PARKING/CH95621D

769 BOLINGBROOK DR.
ROMEOVILLE, IL, 60446
WILL COUNTY

T1505856

CURRENT ISSUE DATE: 01/20/17

ISSUED FOR: REVISION

REV:	DATE:	ISSUED FOR:	BY:
A	10/14/16	FOR CLIENT REVIEW	KLS
B	11/14/16	REVISION	KLS
C	01/20/17	REVISION	KLO

CONSULTANT:

W-T
W-T COMMUNICATION DESIGN GROUP, LLC.
WIRELESS INFRASTRUCTURE
2675 Pratum Avenue
Hoffman Estates, Illinois 60192
PH: (224) 293-6333 FAX: (224) 293-6444
www.wtengineering.com
IL. License No.: 184.006042 Exp: 04/30/17

COPYRIGHT © 2017 W-T COMMUNICATION DESIGN GROUP, LLC.

DRAWN BY:	CHK:	APV:
KLS	JKR	JKR

LICENSER:

JEFFERY S. GUTOWSKY
PROFESSIONAL ENGINEER
STATE OF ILLINOIS
LICENSE # 062-047235
EXPIRES: 11/30/2017 SIGNED: / /

SHEET TITLE:

FENCE, GATE & COMPOUND DETAILS

SHEET NUMBER: **C-6** REVISION: **C**

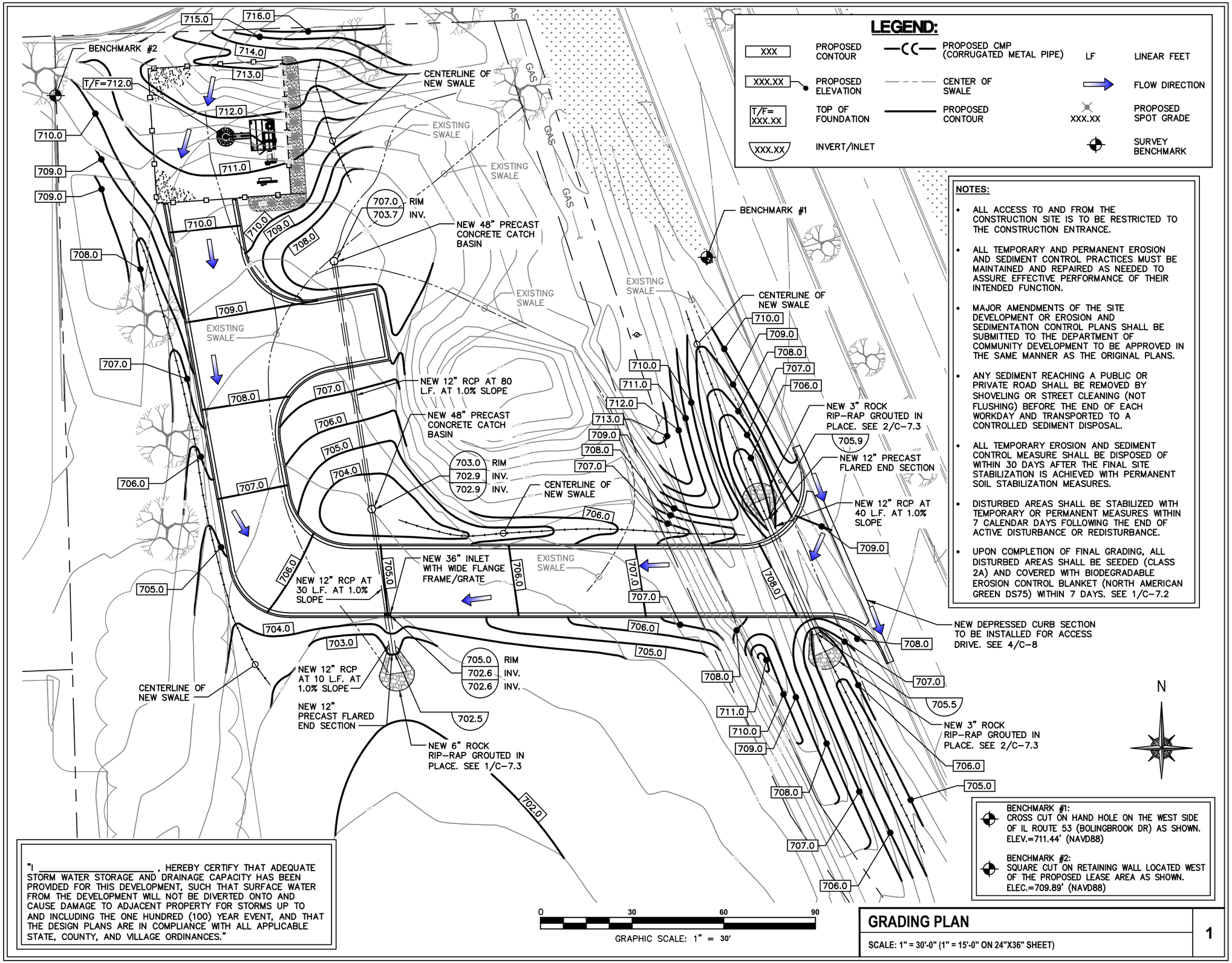

NOTES:

- ALL ACCESS TO AND FROM THE CONSTRUCTION SITE IS TO BE RESTRICTED TO THE CONSTRUCTION ENTRANCE.
- ALL TEMPORARY AND PERMANENT EROSION AND SEDIMENT CONTROL PRACTICES MUST BE MAINTAINED AND REPAIRED AS NEEDED TO ASSURE EFFECTIVE PERFORMANCE OF THEIR INTENDED FUNCTION.
- MAJOR AMENDMENTS OF THE SITE DEVELOPMENT OR EROSION AND SEDIMENTATION CONTROL PLANS SHALL BE SUBMITTED TO THE DEPARTMENT OF COMMUNITY DEVELOPMENT TO BE APPROVED IN THE SAME MANNER AS THE ORIGINAL PLANS.
- ANY SEDIMENT REACHING A PUBLIC OR PRIVATE ROAD SHALL BE REMOVED BY SHOVELING OR STREET CLEANING (NOT FLUSHING) BEFORE THE END OF EACH WORKDAY AND TRANSPORTED TO A CONTROLLED SEDIMENT DISPOSAL.
- ALL TEMPORARY EROSION AND SEDIMENT CONTROL MEASURE SHALL BE DISPOSED OF WITHIN 30 DAYS AFTER THE FINAL SITE STABILIZATION IS ACHIEVED WITH PERMANENT SOIL STABILIZATION MEASURES.
- DISTURBED AREAS SHALL BE STABILIZED WITH TEMPORARY OR PERMANENT MEASURES WITHIN 7 CALENDAR DAYS FOLLOWING THE END OF ACTIVE DISTURBANCE OR REDISTURBANCE.
- UPON COMPLETION OF FINAL GRADING, ALL DISTURBED AREAS SHALL BE SEEDED (CLASS 2A) AND COVERED WITH BIODEGRADABLE EROSION CONTROL BLANKET (NORTH AMERICAN GREEN DS75) WITHIN 7 DAYS. SEE 1/C-7.2

BENCHMARK #1:
CROSS CUT ON HAND HOLE ON THE WEST SIDE OF IL ROUTE 53 (BOLINGBROOK DR) AS SHOWN.
ELEV.=711.44' (NAVD88)

BENCHMARK #2:
SQUARE CUT ON RETAINING WALL LOCATED WEST OF THE PROPOSED LEASE AREA AS SHOWN.
ELEC.=709.89' (NAVD88)

"I _____, HEREBY CERTIFY THAT ADEQUATE STORM WATER STORAGE AND DRAINAGE CAPACITY HAS BEEN PROVIDED FOR THIS DEVELOPMENT, SUCH THAT SURFACE WATER FROM THE DEVELOPMENT WILL NOT BE DIVERTED ONTO AND CAUSE DAMAGE TO ADJACENT PROPERTY FOR STORMS UP TO AND INCLUDING THE ONE HUNDRED (100) YEAR EVENT, AND THAT THE DESIGN PLANS ARE IN COMPLIANCE WITH ALL APPLICABLE STATE, COUNTY, AND VILLAGE ORDINANCES."

GRADING PLAN

SCALE: 1" = 30'-0" (1" = 15'-0" ON 24"X36" SHEET)

1

Eco-Site
240 LEIGH FARM ROAD, SUITE 415
DURHAM, NC 27707

PROJECT INFORMATION:

MARQUETTE DRIVE/IL-0107
LDD PARKING/CH95621D

769 BOLINGBROOK DR.
ROMEOVILLE, IL, 60446
WILL COUNTY

T1505856

CURRENT ISSUE DATE:

01/20/17

ISSUED FOR:

REVISION

REV:	DATE:	ISSUED FOR:	BY:
A	10/14/16	FOR CLIENT REVIEW	KLS
B	11/14/16	REVISION	KLS
C	01/20/17	REVISION	KLO

CONSULTANT:

W-T COMMUNICATION DESIGN GROUP, LLC.
WIRELESS INFRASTRUCTURE

2675 Pratum Avenue
Hoffman Estates, Illinois 60192
PH: (224) 293-6333 FAX: (224) 293-6444
www.wtengineering.com

IL. License No.: 184.006042 Exp: 04/30/17

COPYRIGHT © 2017 W-T COMMUNICATION DESIGN GROUP, LLC.

DRAWN BY:	CHK:	APV:
KLS	JKR	JKR

LICENSER:

JEFFERY S. GUTOWSKY
PROFESSIONAL ENGINEER
STATE OF ILLINOIS
LICENSE # 062-047235
EXPIRES: 11/30/2017 SIGNED: / /

SHEET TITLE:

GRADING PLAN

SHEET NUMBER: C-7

REVISION: C

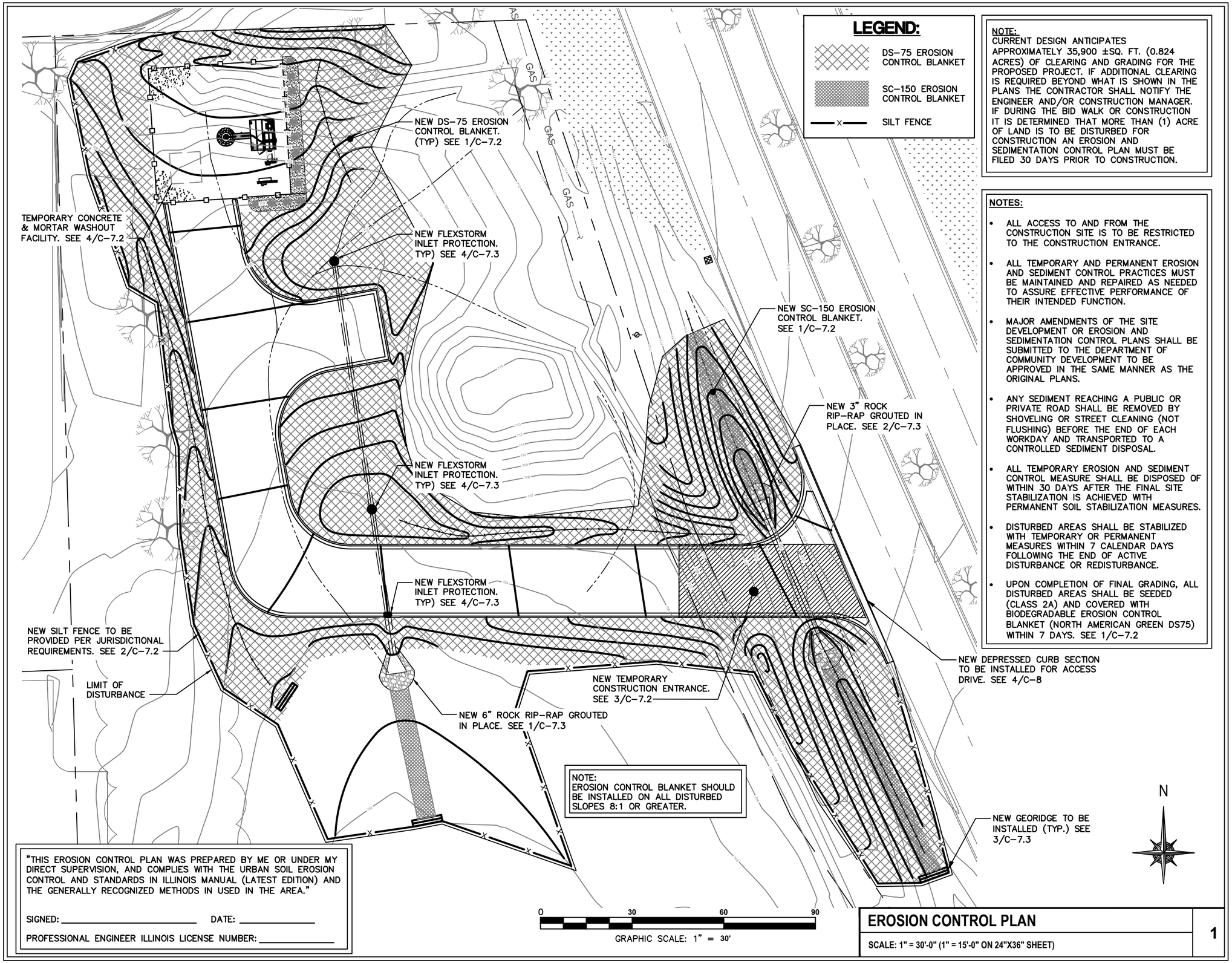

NOTE:
EROSION CONTROL BLANKET SHOULD BE INSTALLED ON ALL DISTURBED SLOPES 8:1 OR GREATER.

NOTE:
CURRENT DESIGN ANTICIPATES APPROXIMATELY 35,900 ±SQ. FT. (0.824 ACRES) OF CLEARING AND GRADING FOR THE PROPOSED PROJECT. IF ADDITIONAL CLEARING IS REQUIRED BEYOND WHAT IS SHOWN IN THE PLANS THE CONTRACTOR SHALL NOTIFY THE ENGINEER AND/OR CONSTRUCTION MANAGER. IF DURING THE BID WALK OR CONSTRUCTION IT IS DETERMINED THAT MORE THAN (1) ACRE OF LAND IS TO BE DISTURBED FOR CONSTRUCTION AN EROSION AND SEDIMENTATION CONTROL PLAN MUST BE FILED 30 DAYS PRIOR TO CONSTRUCTION.

NOTES:

- ALL ACCESS TO AND FROM THE CONSTRUCTION SITE IS TO BE RESTRICTED TO THE CONSTRUCTION ENTRANCE.
- ALL TEMPORARY AND PERMANENT EROSION AND SEDIMENT CONTROL PRACTICES MUST BE MAINTAINED AND REPAIRED AS NEEDED TO ASSURE EFFECTIVE PERFORMANCE OF THEIR INTENDED FUNCTION.
- MAJOR AMENDMENTS OF THE SITE DEVELOPMENT OR EROSION AND SEDIMENTATION CONTROL PLANS SHALL BE SUBMITTED TO THE DEPARTMENT OF COMMUNITY DEVELOPMENT TO BE APPROVED IN THE SAME MANNER AS THE ORIGINAL PLANS.
- ANY SEDIMENT REACHING A PUBLIC OR PRIVATE ROAD SHALL BE REMOVED BY SHOVELING OR STREET CLEANING (NOT FLUSHING) BEFORE THE END OF EACH WORKDAY AND TRANSPORTED TO A CONTROLLED SEDIMENT DISPOSAL.
- ALL TEMPORARY EROSION AND SEDIMENT CONTROL MEASURE SHALL BE DISPOSED OF WITHIN 30 DAYS AFTER THE FINAL SITE STABILIZATION IS ACHIEVED WITH PERMANENT SOIL STABILIZATION MEASURES.
- DISTURBED AREAS SHALL BE STABILIZED WITH TEMPORARY OR PERMANENT MEASURES WITHIN 7 CALENDAR DAYS FOLLOWING THE END OF ACTIVE DISTURBANCE OR REDISTURBANCE.
- UPON COMPLETION OF FINAL GRADING, ALL DISTURBED AREAS SHALL BE SEEDED (CLASS 2A) AND COVERED WITH BIODEGRADABLE EROSION CONTROL BLANKET (NORTH AMERICAN GREEN DS75) WITHIN 7 DAYS. SEE 1/C-7.2

"THIS EROSION CONTROL PLAN WAS PREPARED BY ME OR UNDER MY DIRECT SUPERVISION, AND COMPLIES WITH THE URBAN SOIL EROSION CONTROL AND STANDARDS IN ILLINOIS MANUAL (LATEST EDITION) AND THE GENERALLY RECOGNIZED METHODS IN USED IN THE AREA."

SIGNED: _____ DATE: _____

PROFESSIONAL ENGINEER ILLINOIS LICENSE NUMBER: _____

EROSION CONTROL PLAN

SCALE: 1" = 30'-0" (1" = 15'-0" ON 24"X36" SHEET)

1

Eco-Site
240 LEIGH FARM ROAD, SUITE 415
DURHAM, NC 27707

PROJECT INFORMATION:

MARQUETTE DRIVE/IL-0107
LDD PARKING/CH95621D

769 BOLINGBROOK DR.
ROMEOVILLE, IL, 60446
WILL COUNTY

T1505856

CURRENT ISSUE DATE:
01/20/17

ISSUED FOR:
REVISION

REV:	DATE:	ISSUED FOR:	BY:
A	10/14/16	FOR CLIENT REVIEW	KLS
B	11/14/16	REVISION	KLS
C	01/20/17	REVISION	KLO

CONSULTANT:

W-T
W-T COMMUNICATION DESIGN GROUP, LLC.
WIRELESS INFRASTRUCTURE
2675 Pratum Avenue
Hoffman Estates, Illinois 60192
PH: (224) 293-6333 FAX: (224) 293-6444
www.wtengineering.com
IL. License No.: 184.006042 Exp: 04/30/17

COPYRIGHT © 2017 W-T COMMUNICATION DESIGN GROUP, LLC.

DRAWN BY:	CHK:	APV:
KLS	JKR	JKR

LICENSER:

JEFFERY S. GUTOWSKY
PROFESSIONAL ENGINEER
STATE OF ILLINOIS
LICENSE # 062-047235
EXPIRES: 11/30/2017 SIGNED: / /

SHEET TITLE:

EROSION CONTROL PLAN

SHEET NUMBER: C-7.1

REVISION: C

NORTH AMERICAN GREEN

SLOPE INSTALLATION

APLICACIONES PARA TALUDES

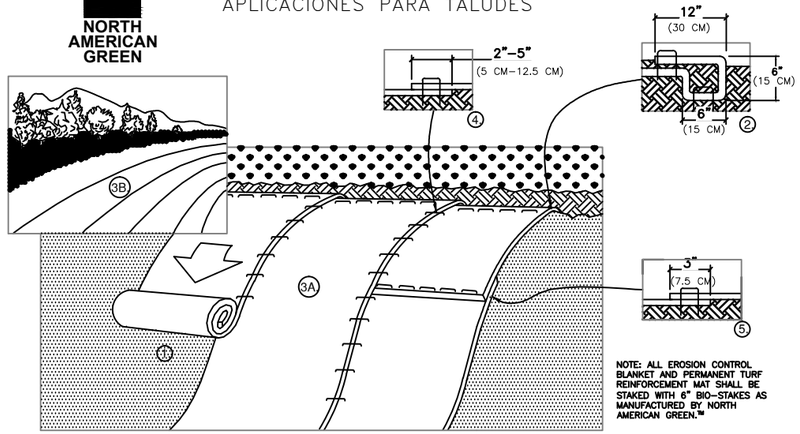

NOTE: ALL EROSION CONTROL BLANKET AND PERMANENT TURF REINFORCEMENT MAT SHALL BE STAKED WITH 6" BIO–STAKES AS MANUFACTURED BY NORTH AMERICAN GREEN.™

1. PREPARE SOIL BEFORE INSTALLING BLANKETS, INCLUDING ANY NECESSARY APPLICATION OF LIME, FERTILIZER, AND SEED. NOTE: WHEN USING CELL–O–SEED DO NOT SEED PREPARED AREA. CELL–O–SEED MUST BE INSTALLED WITH PAPER SIDE DOWN.

2. BEGIN AT THE TOP OF THE SLOPE BY ANCHORING THE BLANKET IN A 6" (15 CM) DEEP X 6" (15 CM) WIDE TRENCH WITH APPROXIMATELY 12" (30cm) OF BLANKET EXTENDED BEYOND THE UP–SLOPE PORTION OF THE TRENCH. ANCHOR THE BLANKET WITH A ROW OF STAPLES/STAKES APPROXIMATELY 12" (30 CM) APART IN THE BOTTOM OF THE TRENCH. BACKFILL AND COMPACT THE TRENCH AFTER STAPLING. APPLY SEED TO COMPACTED SOIL AND FOLD REMAINING 12" (30 CM) PORTION OF BLANKET BACK OVER SEED AND COMPACTED SOIL. SECURE BLANKET OVER COMPACTED SOIL WITH A ROW OF STAPLES/STAKES SPACED APPROXIMATELY 12" (30 CM) APART ACROSS THE WIDTH OF THE BLANKET.

3. ROLL THE BLANKETS (A.) DOWN OR (B.) HORIZONTALLY ACROSS THE SLOPE. BLANKETS WILL UNROLL WITH APPROPRIATE SIDE AGAINST THE SOIL SURFACE. ALL BLANKETS MUST BE SECURELY FASTENED TO SOIL SURFACE BY PLACING STAPLES/STAKES IN APPROPRIATE LOCATIONS AS SHOWN IN THE STAPLE PATTERN GUIDE. WHEN USING THE DOT SYSTEM , STAPLES/STAKES SHOULD BE PLACED THROUGH EACH OF THE COLORED DOTS CORRESPONDING TO THE APPROPRIATE STAPLE PATTERN.

4. THE EDGES OF PARALLEL BLANKETS MUST BE STAPLED WITH APPROXIMATELY 2" – 5" (5 CM – 12.5 CM) OVERLAP DEPENDING ON BLANKET TYPE.

5. CONSECUTIVE BLANKETS SPLICED DOWN THE SLOPE MUST BE PLACED END OVER END (SHINGLE STYLE) WITH AN APPROXIMATE 3" (7.5 CM) OVERLAP. STAPLE THROUGH OVERLAPPED AREA, APPROXIMATELY 12" (30 CM) APART ACROSS ENTIRE BLANKET WIDTH.

NOTE: *IN LOOSE SOIL CONDITIONS, THE USE OF STAPLE OR STAKE LENGTHS GREATER THAN 6" (15 CM) MAY BE NECESSARY TO PROPERLY SECURE THE BLANKETS.

ALL BLANKETS SHALL BE INSTALLED WITH 6" BIOSTAKES.

FOR REFERENCE ONLY

EROSION CONTROL BLANKET DETAIL

SCALE: NONE

1

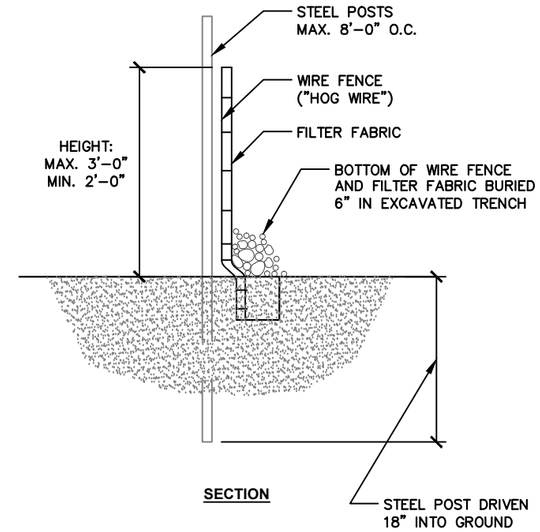

SEDIMENT FENCE (SILT FENCE) DETAIL

SCALE: NONE

2

NOTES:

1. PUT SILT FENCE OR TREE PROTECTION FENCE UP TO ENSURE CONSTRUCTION ENTRANCE IS USED.
2. IF CONSTRUCTION ON THE SITES ARE SUCH THAT THE MUD IS NOT REMOVED BY THE VEHICLE TRAVELING OVER THE STONE, THEN THE TIRES OF THE VEHICLES MUST BE WASHED BEFORE ENTERING THE PUBLIC ROAD.
3. IF A PROJECT CONTINUES TO PULL MUD AND DEBRIS ON TO THE PUBLIC ROAD, THE GOVERNING AUTHORITY WILL CLEAN THE AREA AND INVOICE THE FINANCIALLY RESPONSIBLE PERSON AS INDICATED ON THE FINANCIAL RESPONSIBILITY FORM.

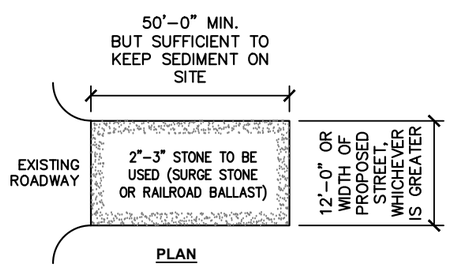

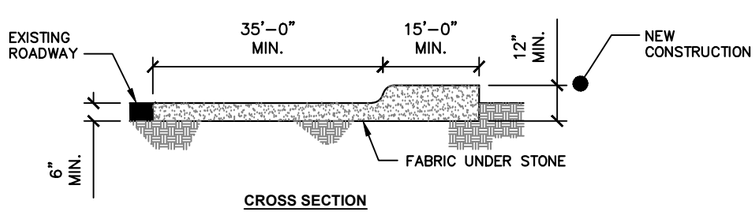

CONSTRUCTION ENTRANCE DETAIL

SCALE: NONE

3

NOTES:

1. MAINTAINING TEMPORARY CONCRETE WASHOUT FACILITIES SHALL INCLUDE REMOVING AND DISPOSING OF HARDENED CONCRETE AND/OR SLURRY AND RETURNING THE FACILITY TO A FUNCTIONAL CONDITION.
2. FACILITY SHALL BE CLEANED OR RECONSTRUCTED IN A NEW AREA ONCE WASHOUT BECOMES TWO–THIRDS FULL.

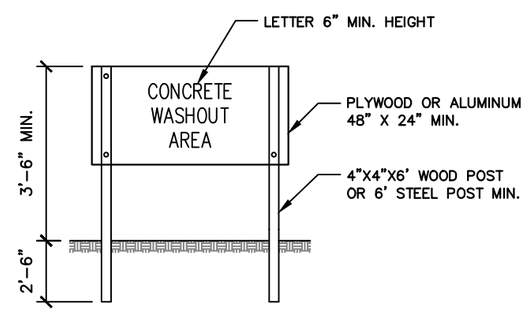

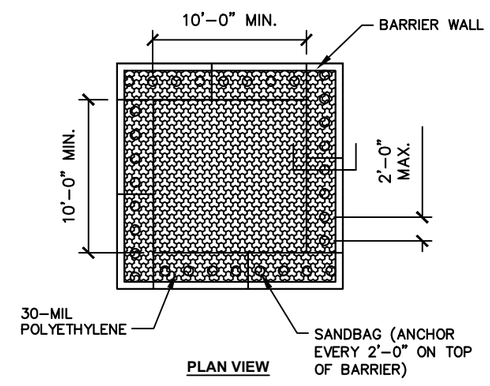

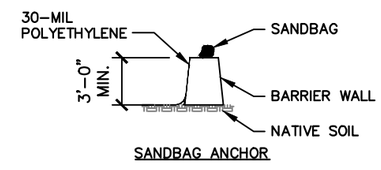

TEMP. CONCRETE WASHOUT FACILITY DETAIL

SCALE: NONE

4

Eco-Site
240 LEIGH FARM ROAD, SUITE 415
DURHAM, NC 27707

PROJECT INFORMATION:

MARQUETTE DRIVE/IL-0107
LDD PARKING/CH95621D

769 BOLINGBROOK DR.
ROMEOVILLE, IL, 60446
WILL COUNTY

T1505856

CURRENT ISSUE DATE:

01/20/17

ISSUED FOR:

REVISION

REV:	DATE:	ISSUED FOR:	BY:
A	10/14/16	FOR CLIENT REVIEW	KLS
B	11/14/16	REVISION	KLS
C	01/20/17	REVISION	KLO

CONSULTANT:

W-T COMMUNICATION DESIGN GROUP, LLC.
WIRELESS INFRASTRUCTURE
2675 Pratum Avenue
Hoffman Estates, Illinois 60192
PH: (224) 293-6333 FAX: (224) 293-6444
www.wtengineering.com
IL. License No.: 184.006042 Exp: 04/30/17

COPYRIGHT © 2017 W-T COMMUNICATION DESIGN GROUP, LLC.

DRAWN BY:	CHK:	APV:
KLS	JKR	JKR

LICENSER:

JEFFERY S. GUTOWSKY
PROFESSIONAL ENGINEER
STATE OF ILLINOIS
LICENSE # 062–047235
EXPIRES: 11/30/2017 SIGNED: / /

SHEET TITLE:

GRADING & EROSION CONTROL DETAILS

SHEET NUMBER: C-7.2

REVISION: C

NOTES:

1. THE FILTER FABRIC SHALL MEET THE REQUIREMENTS IN MATERIAL SPECIFICATIONS 592 GEOTEXTILE TABLE 1 OR 2, CLASS 1.
2. THE ROCK RIPRAP SHALL BE GRANITE COBBLES MEETING THE GRADATION REQUIREMENTS FOR RR-4 IN ARTICLE 1005.03 OF THE IDOT STANDARD SPECIFICATIONS.
3. THE RIPRAP SHALL BE PLACED ACCORDING TO CONSTRUCTION SPECIFICATION 61 ROCK RIPRAP. THE ROCK MAY BE EQUIPMENT PLACED.

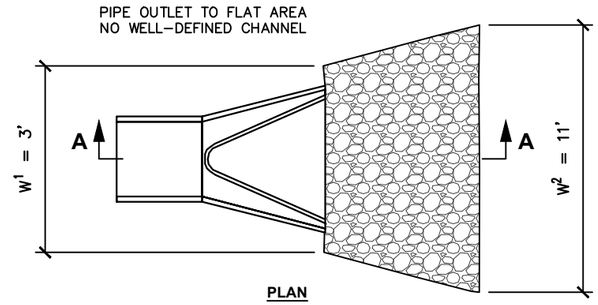

PLAN

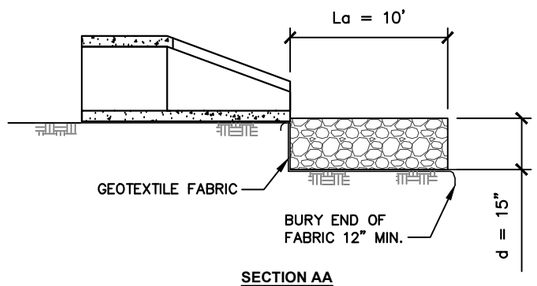

SECTION AA

RIP RAP OUTLET TO FLAT AREA DETAIL

SCALE: NONE

1

NOTES:

1. THE FILTER FABRIC SHALL MEET THE REQUIREMENTS IN MATERIAL SPECIFICATIONS 592 GEOTEXTILE TABLE 1 OR 2, CLASS 1.
2. THE ROCK RIPRAP SHALL BE GRANITE COBBLES MEETING THE GRADATION REQUIREMENTS FOR RR-4 IN ARTICLE 1005.03 OF THE IDOT STANDARD SPECIFICATIONS.
3. THE RIPRAP SHALL BE PLACED ACCORDING TO CONSTRUCTION SPECIFICATION 61 ROCK RIPRAP. THE ROCK MAY BE EQUIPMENT PLACED.

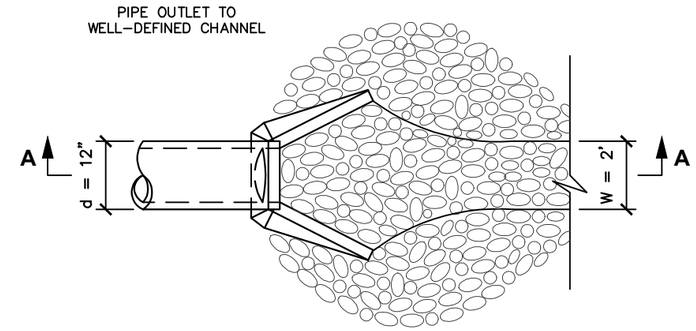

PLAN

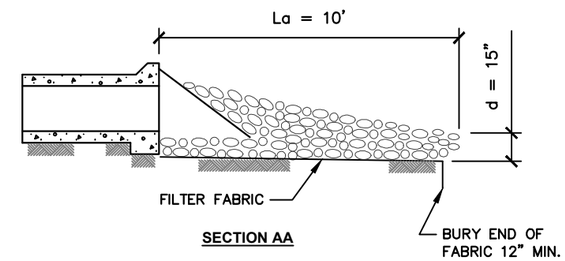

SECTION AA

RIP RAP OUTLET TO CHANNEL DETAIL

SCALE: NONE

2

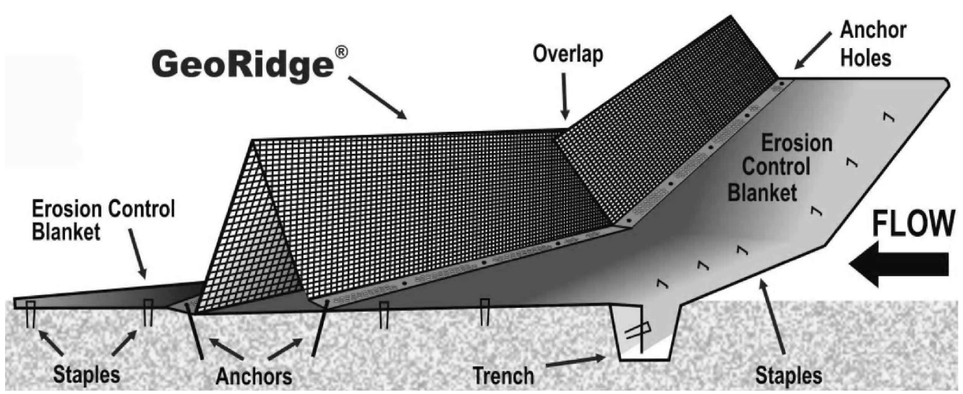

GEORIDGE DETAIL

SCALE: NONE

3

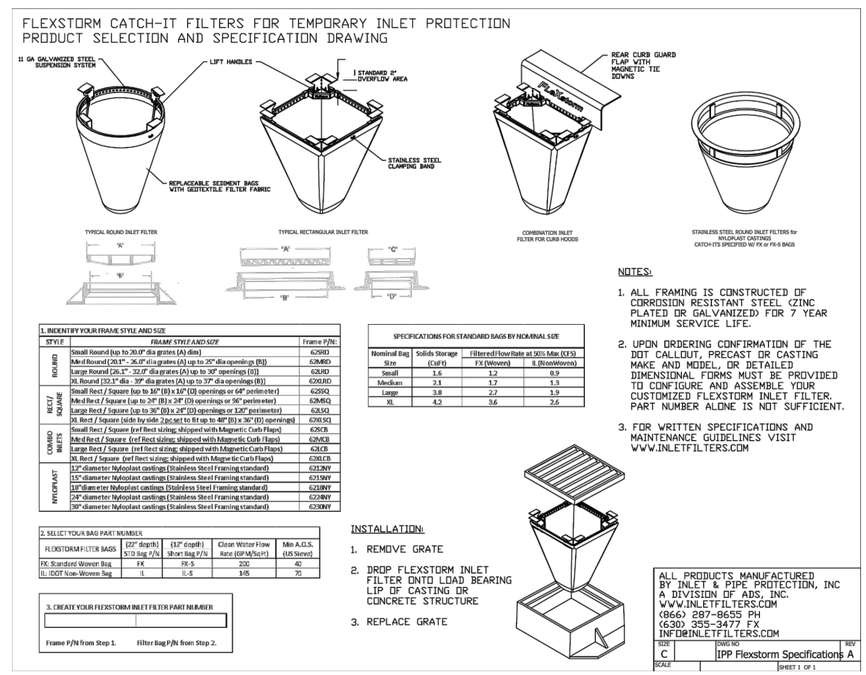

1. IDENTIFY YOUR FRAME STYLE AND SIZE

STYLE	FRAME STYLE AND SIZE	Frame P/N:
ROUND	Small Round (up to 20.0" dia grates (A) dim)	62SRD
	Med Round (20.1" - 26.0" dia grates (A) up to 25" dia openings (B))	62MRD
	Large Round (26.1" - 32.0" dia grates (A) up to 30" openings (B))	62LRD
	XL Round (32.1" dia - 39" dia grates (A) up to 37" dia openings (B))	62XLRD
RECT / SQUARE	Small Rect / Square (up to 16" (B) x 16" (D) openings or 64" perimeter)	62SSQ
	Med Rect / Square (up to 24" (B) x 24" (D) openings or 96" perimeter)	62MSQ
	Large Rect / Square (up to 36" (B) x 24" (D) openings or 120" perimeter)	62LSQ
	XL Rect / Square (side by side 2 pc set to fit up to 48" (B) x 36" (D) openings)	62XLSQ
COMBO INLETS	Small Rect / Square (ref Rect sizing; shipped with Magnetic Curb Flaps)	62SCB
	Med Rect / Square (ref Rect sizing; shipped with Magnetic Curb Flaps)	62MCB
	Large Rect / Square (ref Rect sizing; shipped with Magnetic Curb Flaps)	62LCB
	XL Rect / Square (ref Rect sizing; shipped with Magnetic Curb Flaps)	62XLCB
NYLOPLAST	12" diameter Nyloplast castings (Stainless Steel Framing standard)	6212NY
	15" diameter Nyloplast castings (Stainless Steel Framing standard)	6215NY
	18" diameter Nyloplast castings (Stainless Steel Framing standard)	6218NY
	24" diameter Nyloplast castings (Stainless Steel Framing standard)	6224NY
	30" diameter Nyloplast castings (Stainless Steel Framing standard)	6230NY

SPECIFICATIONS FOR STANDARD BAGS BY NOMINAL SIZE

Nominal Bag Size	Solids Storage (Cu Ft)	Filtered Flow Rate at 50% Max (CFS) FX (Woven)	IL (Non-Woven)
Small	1.6	1.2	0.9
Medium	2.1	1.7	1.3
Large	3.8	2.7	1.9
XL	4.2	3.6	2.6

2. SELECT YOUR BAG PART NUMBER

FLEXSTORM FILTER BAGS	(22" depth) STD Bag P/N	(12" depth) Short Bag P/N	Clean Water Flow Rate (GPM/Sqft)	Min A.O.S. (US Sieve)
FX: Standard Woven Bag	FX	FX-S	200	40
IL: IDOT Non-Woven Bag	IL	IL-S	145	70

3. CREATE YOUR FLEXSTORM INLET FILTER PART NUMBER

Frame P/N from Step 1. Filter Bag P/N from Step 2.

INLET PROTECTION DETAIL

SCALE: NONE

4

Eco-Site
240 LEIGH FARM ROAD, SUITE 415
DURHAM, NC 27707

PROJECT INFORMATION:

MARQUETTE DRIVE/IL-0107
LDD PARKING/CH95621D

769 BOLINGBROOK DR.
ROMEOVILLE, IL, 60446
WILL COUNTY

T1505856

CURRENT ISSUE DATE:

01/20/17

ISSUED FOR:

REVISION

REV:	DATE:	ISSUED FOR:	BY:
A	10/14/16	FOR CLIENT REVIEW	KLS
B	11/14/16	REVISION	KLS
C	01/20/17	REVISION	KLO

CONSULTANT:

W-T

W-T COMMUNICATION DESIGN GROUP, LLC.
WIRELESS INFRASTRUCTURE

2675 Pratum Avenue
Hoffman Estates, Illinois 60192
PH: (224) 293-6333 FAX: (224) 293-6444
www.wtengineering.com

IL. License No.: 184.006042 Exp: 04/30/17

COPYRIGHT © 2017 W-T COMMUNICATION DESIGN GROUP, LLC.

DRAWN BY:	CHK:	APV:
KLS	JKR	JKR

LICENSER:

JEFFERY S. GUTOWSKY
PROFESSIONAL ENGINEER
STATE OF ILLINOIS
LICENSE # 062-047235
EXPIRES: 11/30/2017 SIGNED: / /

SHEET TITLE:

GRADING & EROSION CONTROL DETAILS

SHEET NUMBER: **C-7.3**

REVISION: **C**

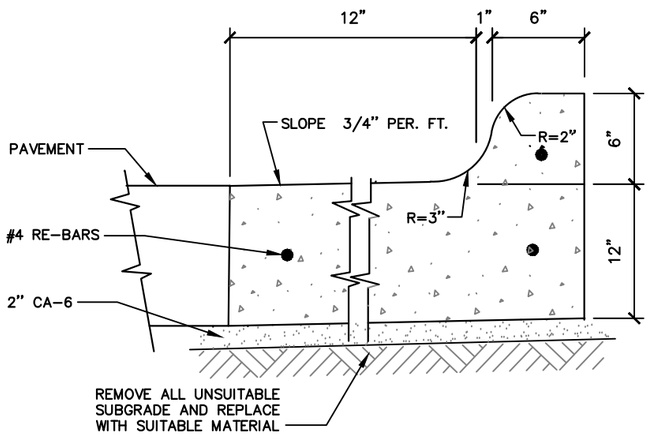

B-6.12 CURB DETAIL

SCALE: NONE

1

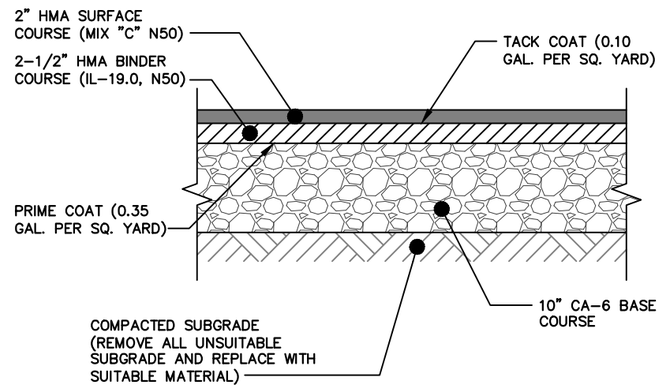

PAVEMENT STRUCTURAL NUMBER

2" HMA SURFACE COURSE (MIX "C" N50)	0.80
2-1/2" HMA BINDER COURSE (IL-19.0, N50)	0.825
10" CA-6 BASE COURSE	1.00
PAVEMENT STRUCTURAL NUMBER	3.025

ASPHALT DRIVE DETAIL

SCALE: NONE

2

DETAIL NOT USED

SCALE: NONE

3

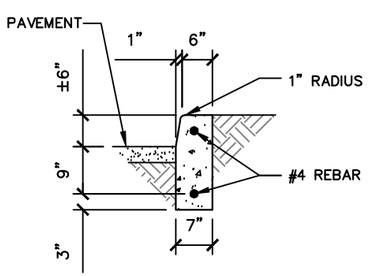

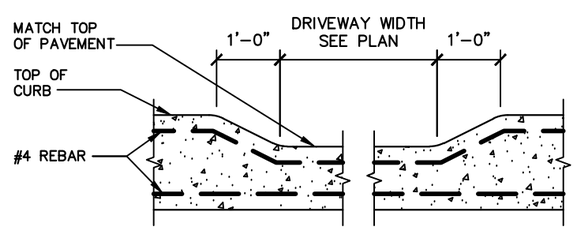

NOTES

1. BARRIER CURB SHALL BE CONCRETE.
2. 1/4" WIDE X 1" DEEP CONTRACTION JOINTS SHALL BE LOCATED AT RADII TANGENTS.
3. BASE MATERIAL & COMPACTION SHALL MEET THE LOCAL DEPARTMENT OF TRANSPORTATION STANDARD SPECIFICATIONS.

DEPRESSED CURB DETAIL

SCALE: NONE

4

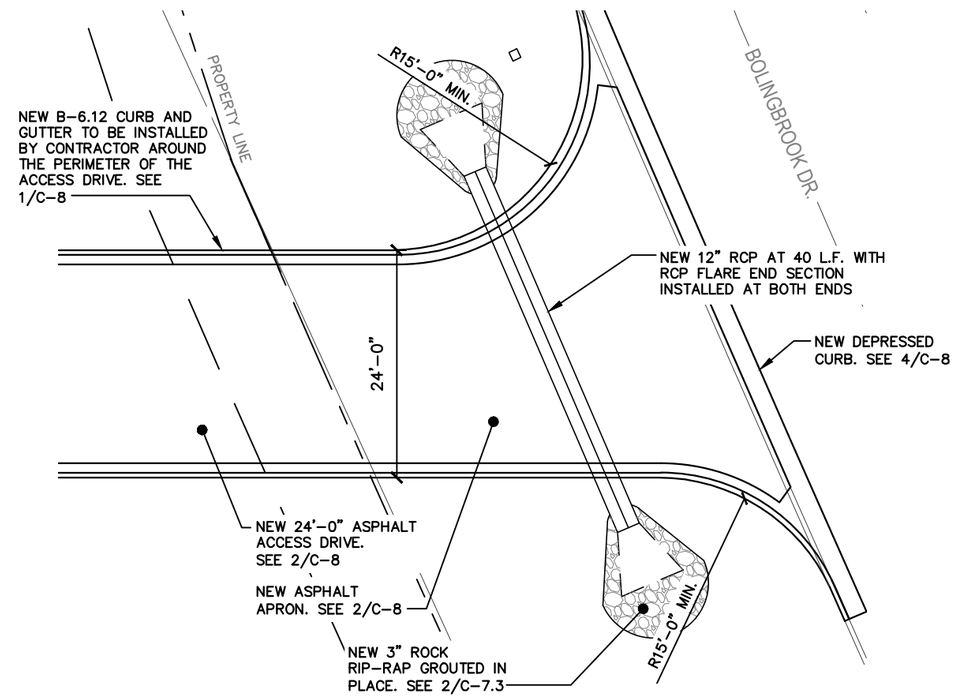

ASPHALT APRON DETAIL

SCALE: NONE

5

Eco-Site
240 LEIGH FARM ROAD, SUITE 415
DURHAM, NC 27707

PROJECT INFORMATION:

MARQUETTE DRIVE/IL-0107
LDD PARKING/CH95621D

769 BOLINGBROOK DR.
ROMEOVILLE, IL, 60446
WILL COUNTY

T1505856

CURRENT ISSUE DATE:

01/20/17

ISSUED FOR:

REVISION

REV:	DATE:	ISSUED FOR:	BY:
A	10/14/16	FOR CLIENT REVIEW	KLS
B	11/14/16	REVISION	KLS
C	01/20/17	REVISION	KLO

CONSULTANT:

W-T
W-T COMMUNICATION DESIGN GROUP, LLC.
WIRELESS INFRASTRUCTURE
2675 Pratum Avenue
Hoffman Estates, Illinois 60192
PH: (224) 293-6333 FAX: (224) 293-6444
www.wtengineering.com
IL. License No.: 184.006042 Exp: 04/30/17

COPYRIGHT © 2017 W-T COMMUNICATION DESIGN GROUP, LLC.

DRAWN BY:	CHK:	APV:
KLS	JKR	JKR

LICENSER:

JEFFERY S. GUTOWSKY
PROFESSIONAL ENGINEER
STATE OF ILLINOIS
LICENSE # 062-047235
EXPIRES: 11/30/2017 SIGNED: / /

SHEET TITLE:

ACCESS ROAD & EROSION CONTROL DETAILS

SHEET NUMBER: **C-8**

REVISION: **C**

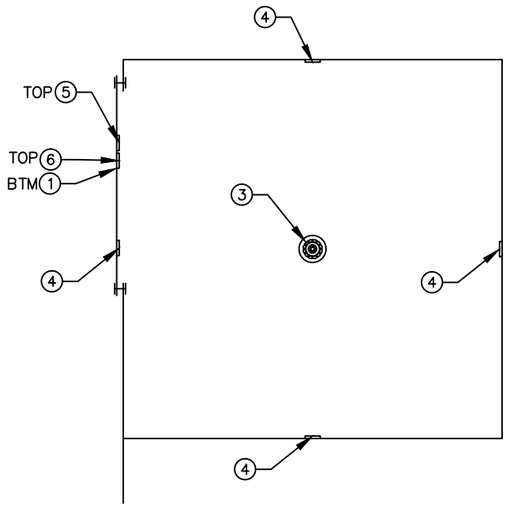

NOTE:
SEE TYPICAL SIGNS AND SPECIFICATIONS DETAIL ON THIS SHEET FOR SIGN DESIGNATIONS.

OVERALL SIGN PLACEMENT PLAN VIEW

SCALE: NONE

1

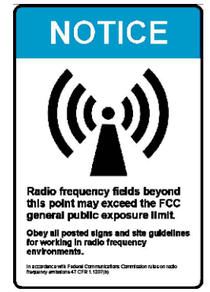

① NOTICE - RF SIGN (BLUE)

18" x 12" DIGITAL PRINT MOUNTED TO 0.040 THICK ALUMINUM (OPERATIONS PROVIDED)

② WARNING - RF SIGN

18" x 12" DIGITAL PRINT MOUNTED TO 0.040 THICK ALUMINUM (OPERATIONS PROVIDED)

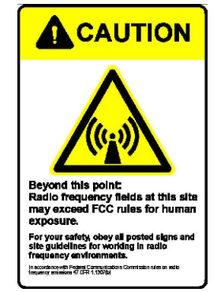

③ CAUTION - RF SIGN (YELLOW)

18" x 12" DIGITAL PRINT MOUNTED TO 0.040 THICK ALUMINUM (OPERATIONS PROVIDED)

④ NO-TRESSPASSING SIGN

12" x 18" DIGITAL PRINT MOUNTED TO 0.40 THICK ALUMINUM (OPERATIONS PROVIDED)

NOTICE

GUIDELINES FOR WORKING IN RADIO FREQUENCY ENVIRONMENTS

- All personnel should have electromagnetic energy (EME) awareness training.
- All personnel entering this site must be authorized.
- Obey all posted signs.
- Assume all antennas are active.
- Before working on antennas, notify owners and disable appropriate transmitters.
- Maintain minimum 3 feet clearance from all antennas.
- Do not stop in front of antennas.
- Use personal RF monitors while working near antennas.
- Never operate transmitters without shields during normal operation.
- Do not operate base station antennas in equipment room.

⑤ RF GUIDELINE SIGN

12" X 18" DIGITAL PRINT MOUNTED TO 0.040 THICK ALUMINUM (OPERATIONS PROVIDED)

TOWER ID:
SITE NAME:
E911 ADDRESS:
FCC#:

Eco-Site

FOR TOWER LEASING INFORMATION &

EMERGENCY CONTACT
1-866-899-6191

⑥ ECO-SITE ID SIGN

18" HIGH X 24" WIDE (OPERATIONS PROVIDED)

TYPICAL SIGNS AND SPECIFICATIONS

SCALE: NONE

2

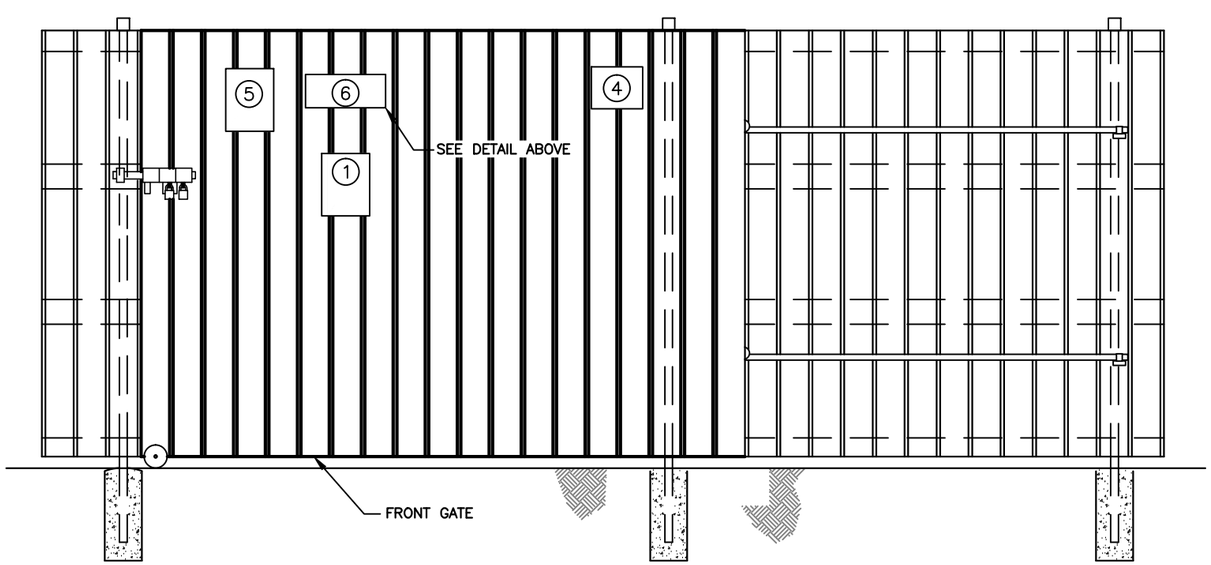

SIGNAGE NOTES:

1. SIGNS SHALL BE FABRICATED FROM CORROSION RESISTANT PRESSED METAL, AND PAINTED WITH LONG LASTING UV RESISTANT COATINGS.
2. SIGNS (EXCEPT WHERE NOTED OTHERWISE) SHALL BE MOUNTED TO THE TOWER, GATE, AND FENCE USING A MINIMUM OF 9 GAUGE ALUMINUM WIRE, HOG RINGS (AS UTILIZED IN FENCE INSTALLATIONS) OR BRACKETS WHERE NECESSARY. BRACKETS SHALL BE OF SIMILAR METAL AS THE STRUCTURE TO AVOID GALVANIC CORROSION.

SITE SIGNAGE FRONT GATE VIEW

SCALE: NONE

3

Eco-Site
240 LEIGH FARM ROAD, SUITE 415
DURHAM, NC 27707

PROJECT INFORMATION:

MARQUETTE DRIVE/IL-0107
LDD PARKING/CH95621D

769 BOLINGBROOK DR.
ROMEOVILLE, IL, 60446
WILL COUNTY

T1505856

CURRENT ISSUE DATE:
01/20/17

ISSUED FOR:
REVISION

REV:	DATE:	ISSUED FOR:	BY:
A	10/14/16	FOR CLIENT REVIEW	KLS
B	11/14/16	REVISION	KLS
C	01/20/17	REVISION	KLO

CONSULTANT:

W-T
W-T COMMUNICATION DESIGN GROUP, LLC.
WIRELESS INFRASTRUCTURE
2675 Pratum Avenue
Hoffman Estates, Illinois 60192
PH: (224) 293-6333 FAX: (224) 293-6444
www.wtengineering.com
IL. License No.: 184.006042 Exp: 04/30/17

COPYRIGHT © 2017 W-T COMMUNICATION DESIGN GROUP, LLC.

DRAWN BY:	CHK:	APV:
KLS	JKR	JKR

LICENSER:

JEFFERY S. GUTOWSKY
PROFESSIONAL ENGINEER
STATE OF ILLINOIS
LICENSE # 062-047235
EXPIRES: 11/30/2017 SIGNED: / /

SHEET TITLE:

SITE SIGNAGE DETAILS

SHEET NUMBER: C-9

REVISION: C

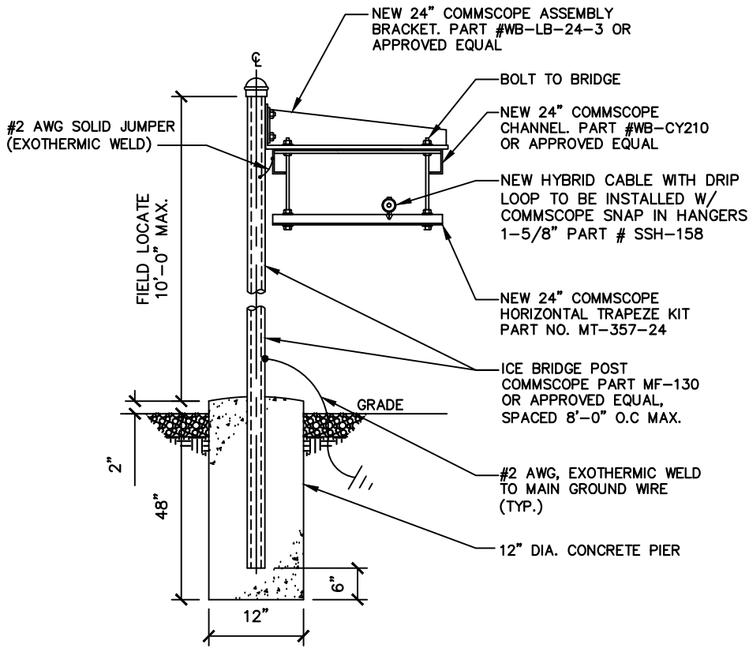

WAVEGUIDE BRIDGE DETAIL

SCALE: NONE

1

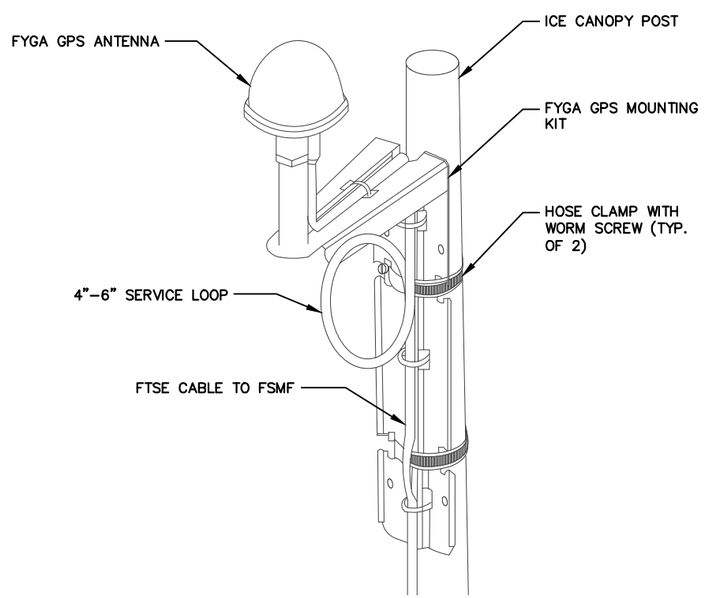

GPS ANTENNA DETAIL

SCALE: NONE

2

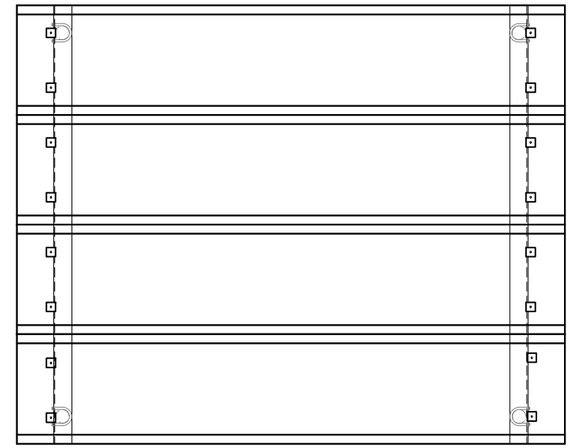

TOP VIEW

NEW 8'-0" X 10'-0" ICE CANOPY W/ BASE SHOE LEGS COMMSCOPE PART # IC-0810-S. MOUNT TO PAD PER MANUFACTURER REQUIREMENTS.

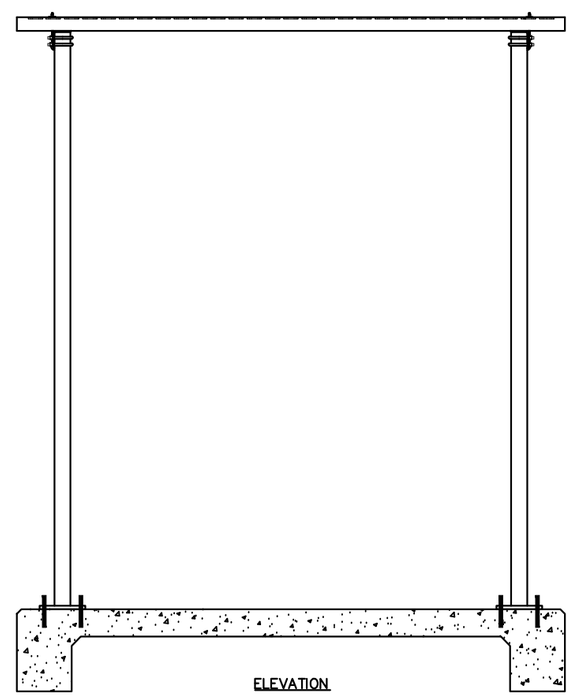

ELEVATION

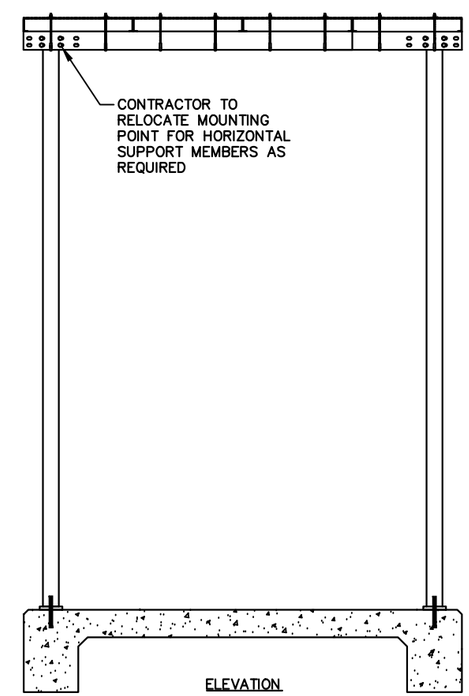

ELEVATION

ICE BRIDGE CANOPY DETAIL

SCALE: NONE

3

Eco-Site
240 LEIGH FARM ROAD, SUITE 415
DURHAM, NC 27707

PROJECT INFORMATION:

MARQUETTE DRIVE/IL-0107
LDD PARKING/CH95621D

769 BOLINGBROOK DR.
ROMEOVILLE, IL, 60446
WILL COUNTY

T1505856

CURRENT ISSUE DATE:

01/20/17

ISSUED FOR:

REVISION

REV:	DATE:	ISSUED FOR:	BY:
A	10/14/16	FOR CLIENT REVIEW	KLS
B	11/14/16	REVISION	KLS
C	01/20/17	REVISION	KLO

CONSULTANT:

W-T
W-T COMMUNICATION DESIGN GROUP, LLC.
WIRELESS INFRASTRUCTURE
2675 Pratum Avenue
Hoffman Estates, Illinois 60192
PH: (224) 293-6333 FAX: (224) 293-6444
www.wtengineering.com
IL. License No.: 184.006042 Exp: 04/30/17

COPYRIGHT © 2017 W-T COMMUNICATION DESIGN GROUP, LLC.

DRAWN BY:	CHK:	APV:
KLS	JKR	JKR

LICENSER:

JEFFERY S. GUTOWSKY
PROFESSIONAL ENGINEER
STATE OF ILLINOIS
LICENSE # 062-047235
EXPIRES: 11/30/2017 SIGNED: / /

SHEET TITLE:

WAVEGUIDE BRIDGE DETAILS

SHEET NUMBER: **C-10**

REVISION: **C**

NOTE:
W-T'S SCOPE OF WORK DOES NOT INCLUDE A STRUCTURAL EVALUATION OF THIS TOWER OR STRUCTURE. NEW ANTENNAS AND EQUIPMENT SHOWN ON THIS PLAN HAVE NOT BEEN EVALUATED TO VERIFY THE TOWER OR STRUCTURE HAS THE CAPACITY TO ADEQUATELY SUPPORT THESE ANTENNAS. PRIOR TO ANY ANTENNA OR EQUIPMENT INSTALLATION, A STRUCTURAL EVALUATION OF THE TOWER OR STRUCTURE, INCLUDING ALL ANTENNA MOUNTING SYSTEMS & HARDWARE SHALL BE PERFORMED.

NOTE:
ALL INFORMATION ON THIS PAGE IS PROVIDED BY ECO-SITE AND/OR OTHERS AND IS SHOWN FOR ILLUSTRATIVE PURPOSES ONLY. CONTRACTOR SHALL CONTACT THE ECO-SITE CONSTRUCTION MANAGER PRIOR TO CONSTRUCTION FOR ALL DETAILED ANTENNA, MOUNT, AND COAX CABLE INFORMATION.

NOTE:
CONTRACTOR TO VERIFY ALL HEIGHTS AND AZIMUTHS IN FIELD PRIOR TO CONSTRUCTION. CONTRACTOR SHALL NOTIFY T-MOBILE AND ENGINEERING FIRM OF ANY DISCREPANCIES BEFORE PROCEEDING.

NOTE:
CONTRACTOR SHALL VERIFY ALL FINAL CONNECTION LOCATIONS WITH T-MOBILE ENGINEER, RF ENGINEER, AND NET-OPS PRIOR TO INSTALLATION.

NOTE:
CONTRACTOR TO ARRANGE NEW MODULES/EQUIPMENT TO AVOID INTERFERING WITH SAFETY CLIMB.

NOTE:
CONTRACTOR TO USE PROPER TORQUE WRENCH WHEN INSTALLING AND TIGHTENING CONNECTORS TO INSURE PROPER FIT.

NOTE:
CONTRACTOR SHALL BE RESPONSIBLE FOR VERIFYING FINAL RF CONFIGURATION AND NOTIFY T-MOBILE AND ENGINEERING FIRM WITH ANY DISCREPANCIES.

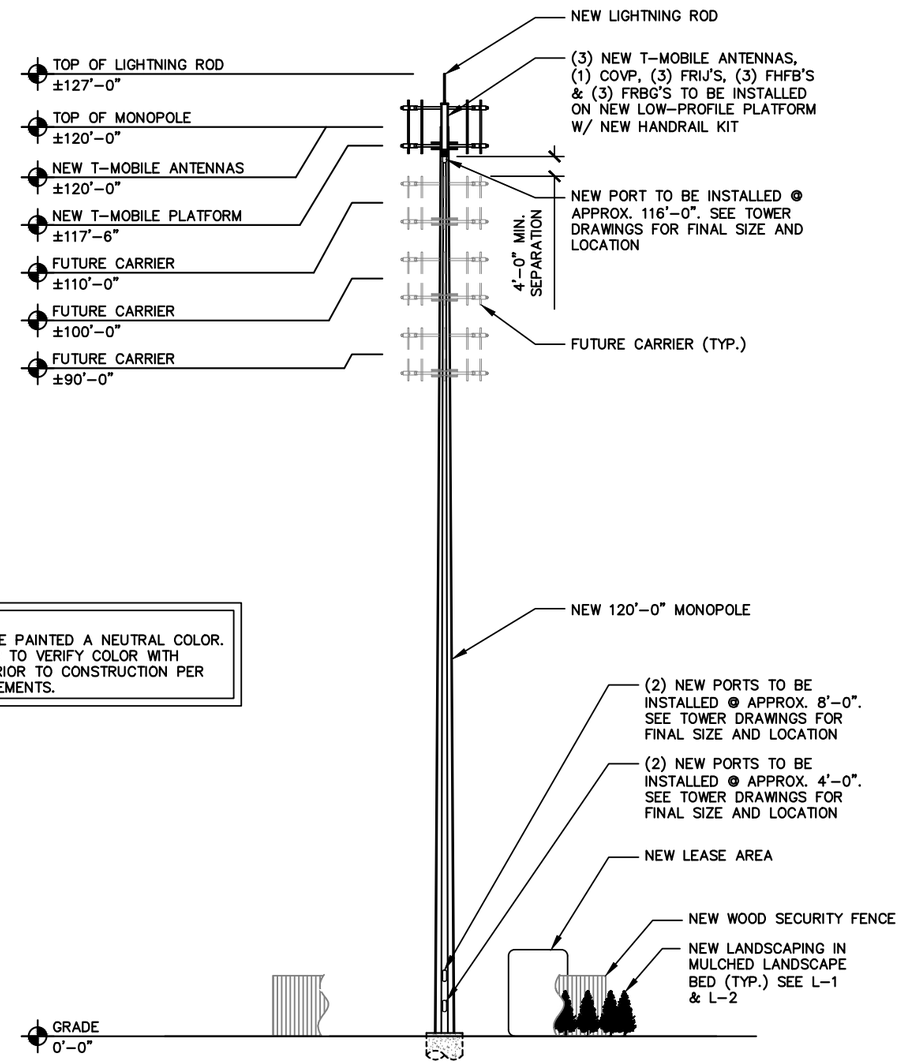

NOTE:
TOWER TO BE PAINTED A NEUTRAL COLOR. CONTRACTOR TO VERIFY COLOR WITH ECO-SITE PRIOR TO CONSTRUCTION PER CITY REQUIREMENTS.

MONOPOLE TOWER ELEVATION - SOUTH VIEW

SCALE: 1" = 20'-0" (1" = 10'-0" ON 24"X36" SHEET)

1

Eco-Site
240 LEIGH FARM ROAD, SUITE 415
DURHAM, NC 27707

PROJECT INFORMATION:

MARQUETTE DRIVE/IL-0107
LDD PARKING/CH95621D

769 BOLINGBROOK DR.
ROMEOVILLE, IL, 60446
WILL COUNTY
T1505856

CURRENT ISSUE DATE:
01/20/17

ISSUED FOR:
REVISION

REV:	DATE:	ISSUED FOR:	BY:
A	10/14/16	FOR CLIENT REVIEW	KLS
B	11/14/16	REVISION	KLS
C	01/20/17	REVISION	KLO

CONSULTANT:

W-T
W-T COMMUNICATION DESIGN GROUP, LLC.
WIRELESS INFRASTRUCTURE
2675 Pratum Avenue
Hoffman Estates, Illinois 60192
PH: (224) 293-6333 FAX: (224) 293-6444
www.wtengineering.com
IL. License No.: 184.006042 Exp: 04/30/17

COPYRIGHT © 2017 W-T COMMUNICATION DESIGN GROUP, LLC.

DRAWN BY:	CHK:	APV:
KLS	JKR	JKR

LICENSER:

JEFFERY S. GUTOWSKY
PROFESSIONAL ENGINEER
STATE OF ILLINOIS
LICENSE # 062-047235
EXPIRES: 11/30/2017 SIGNED: / /

SHEET TITLE:
ANTENNA & TOWER ELEVATION DETAILS

SHEET NUMBER: **C-11**
REVISION: **C**

ANTENNA & CABLE SCHEDULE

SECTOR	ALPHA					BETA					GAMMA				
LOCATION	A–1					B–1					C–1				
AZIMUTH	30°					140°					270°				
RAD CENTER	120'–0"					120'–0"					120'–0"				
COLOR CODING	RED (1–9)					GREEN (1–9)					BLUE (1–9)				
MODEL #	NOKIA FASB RAS (PENTA)					NOKIA FASB RAS (PENTA)					NOKIA FASB RAS (PENTA)				
ACTIVE TECHNOLOGY	L700	L1900 U1900	L1900 U1900	L2100	L2100	L700	L1900 U1900	L1900 U1900	L2100	L2100	L700	L1900 U1900	L1900 U1900	L2100	L2100
MECHANICAL DOWNTILT	2					2					2				
ELECTRICAL DOWNTILT	5	5	5	5	5	3	3	3	3	3	3	3	3	3	3
RRU TYPE	(1) FRBG (1) FHFB (INTERNALLY) (1) FRIJ (INTERNALLY)					(1) FRBG (1) FHFB (INTERNALLY) (1) FRIJ (INTERNALLY)					(1) FRBG (1) FHFB (INTERNALLY) (1) FRIJ (INTERNALLY)				
FIBER JUMPER LENGTH	15'–0"					15'–0"					15'–0"				
RF JUMPER LENGTH	6'–0"					6'–0"					6'–0"				
HCS DIA. & TYPE	–					–					1.584" HIGH CAPACITY				
HCS ACTUAL LENGTH	–					–					±160'–0"				
HCS FACTORY LENGTH	–					–					175'–0"				

NOTE:
W–T'S SCOPE OF WORK DOES NOT INCLUDE A STRUCTURAL EVALUATION OF THIS TOWER OR STRUCTURE. NEW ANTENNAS AND EQUIPMENT SHOWN ON THIS PLAN HAVE NOT BEEN EVALUATED TO VERIFY THE TOWER OR STRUCTURE HAS THE CAPACITY TO ADEQUATELY SUPPORT THESE ANTENNAS. PRIOR TO ANY ANTENNA OR EQUIPMENT INSTALLATION, A STRUCTURAL EVALUATION OF THE TOWER OR STRUCTURE, INCLUDING ALL ANTENNA MOUNTING SYSTEMS & HARDWARE SHALL BE PERFORMED.

NOTE:
ANTENNA INFORMATION OBTAINED FROM T–MOBILE RF DATA CONFIGURATION SHEET DATED 11/23/16

MAGNETIC NORTH DEVIATION FOR TRUE NORTH 3.48 DEGREES

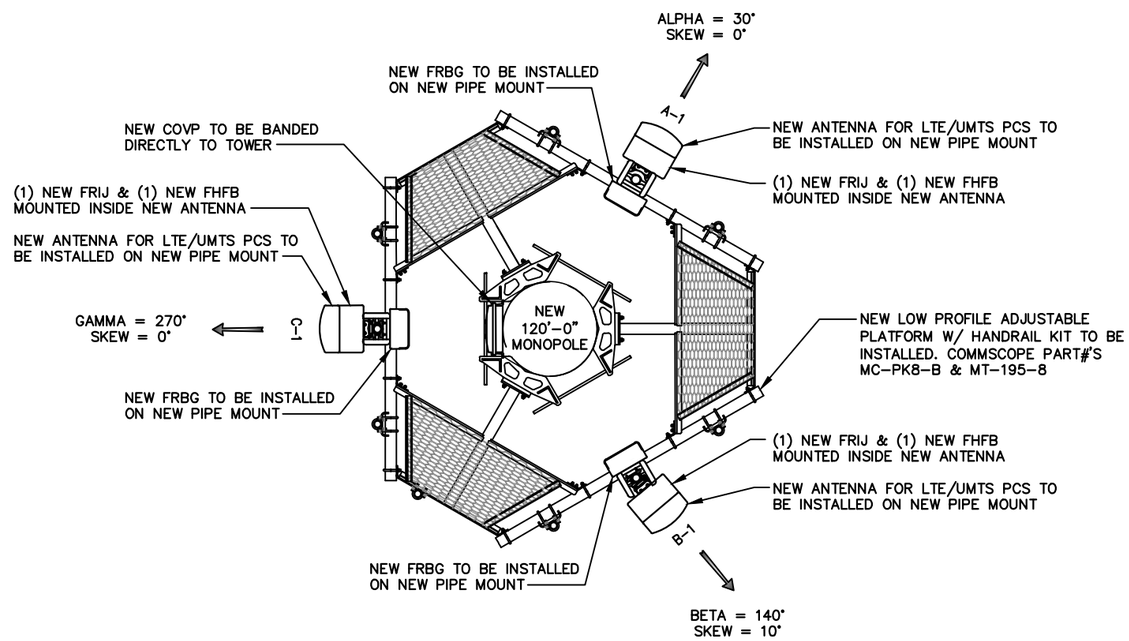

ANTENNA PLAN - 120 FT. LEVEL

SCALE: 1/4" = 1'-0" (1/2" = 1'-0" ON 24"X36" SHEET)

1

Eco-Site
240 LEIGH FARM ROAD, SUITE 415
DURHAM, NC 27707

PROJECT INFORMATION:
MARQUETTE DRIVE/IL-0107
LDD PARKING/CH95621D
769 BOLINGBROOK DR.
ROMEOVILLE, IL, 60446
WILL COUNTY
T1505856

CURRENT ISSUE DATE: 01/20/17

ISSUED FOR: REVISION

REV:	DATE:	ISSUED FOR:	BY:
A	10/14/16	FOR CLIENT REVIEW	KLS
B	11/14/16	REVISION	KLS
C	01/20/17	REVISION	KLO

CONSULTANT:
W-T
W-T COMMUNICATION DESIGN GROUP, LLC.
WIRELESS INFRASTRUCTURE
2675 Pratum Avenue
Hoffman Estates, Illinois 60192
PH: (224) 293-6333 FAX: (224) 293-6444
www.wtengineering.com
IL. License No.: 184.006042 Exp: 04/30/17

COPYRIGHT © 2017 W-T COMMUNICATION DESIGN GROUP, LLC.

DRAWN BY:	CHK:	APV:
KLS	JKR	JKR

LICENSER:
JEFFERY S. GUTOWSKY
PROFESSIONAL ENGINEER
STATE OF ILLINOIS
LICENSE # 062–047235
EXPIRES: 11/30/2017 SIGNED: / /

SHEET TITLE:
ANTENNA PLAN
120 FT. LEVEL

SHEET NUMBER: C-12
REVISION: C

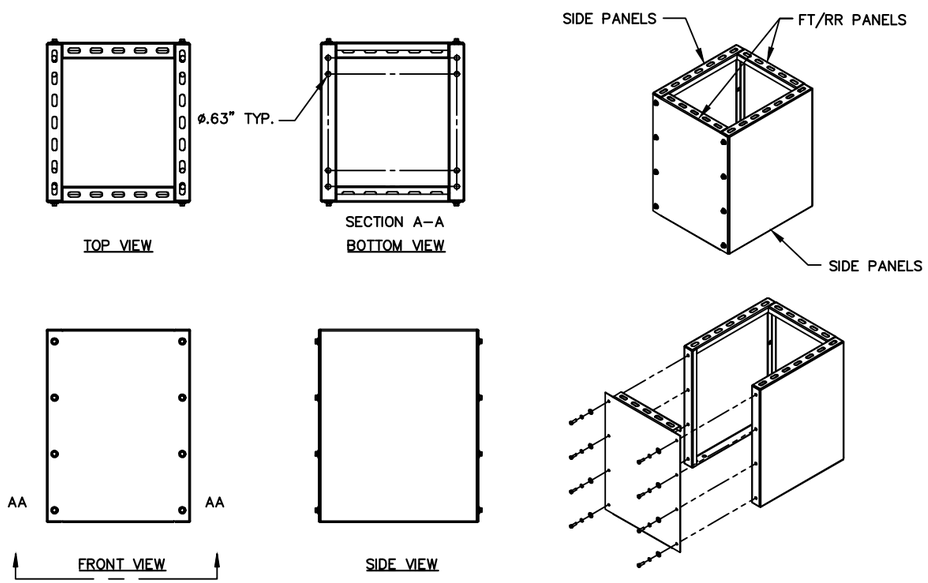

CUBE DETAIL

SCALE: NONE

1

Power Output	4 x 40 W w/o fans
IBW	Full Band up to 90MHz DL & 70MHz UL
OBW	40 MHz
RF Sharing	LTE & WCDMA
Mass/Volume	20 kg Weight Core Dimensions (mm) = 545x290x123= 19.4L Envelope (mm) = 587.2x320x123= 25.9L
Antenna Conf.	4Tx/4Rx
Temperature	-40 to 55 °C
IP class	IP65
Input Power	AC 90 - 264 V or DC 48 V
Cooling	Natural Convection
Mounting	Wall, Pole, RAS , horizontal book mount
BBU connection	3x 6Gbps SFP

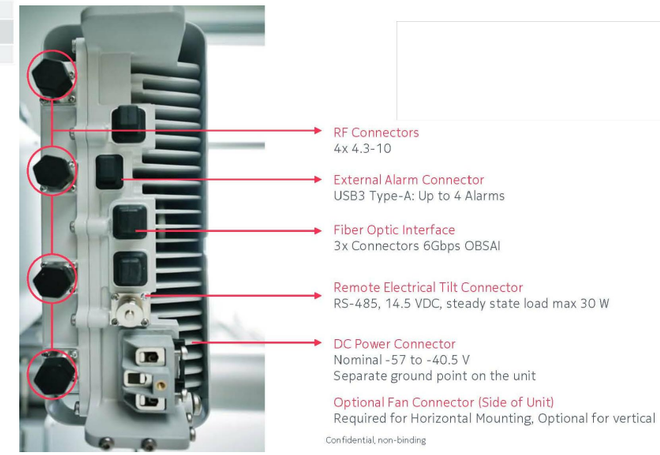

FRIJ DETAIL

SCALE: NONE

2

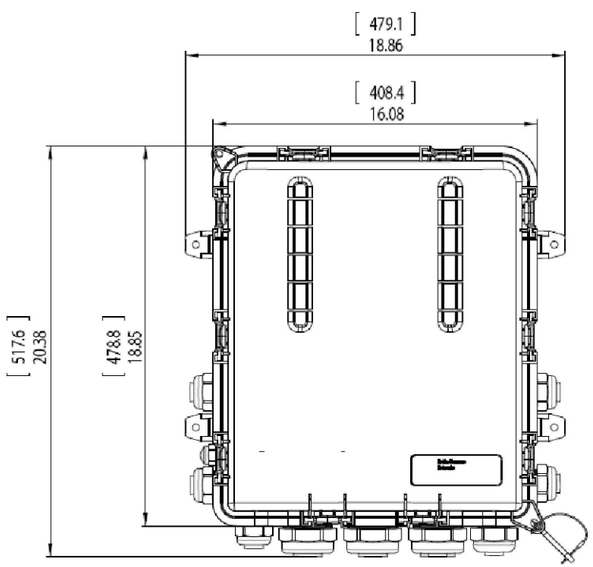

COVP DETAIL

SCALE: NONE

3

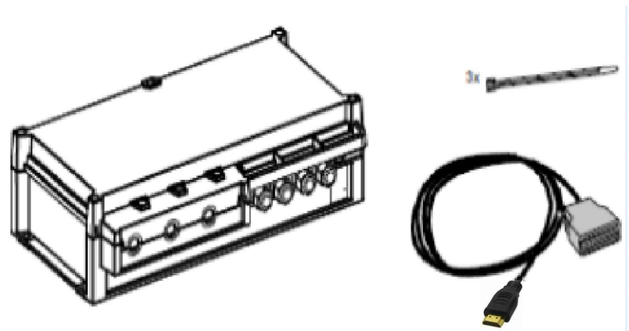

FSEB DETAIL

SCALE: NONE

4

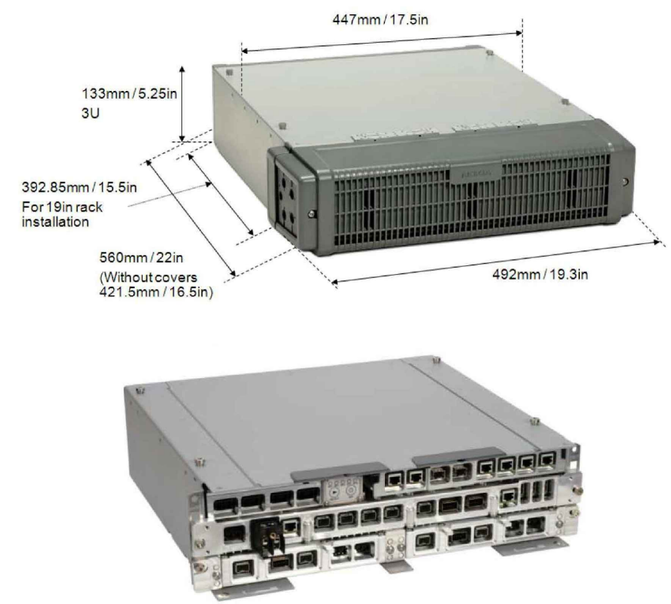

FSMF DETAIL

SCALE: NONE

5

Eco-Site
240 LEIGH FARM ROAD, SUITE 415
DURHAM, NC 27707

PROJECT INFORMATION:

MARQUETTE DRIVE/IL-0107
LDD PARKING/CH95621D

769 BOLINGBROOK DR.
ROMEOVILLE, IL, 60446
WILL COUNTY

T1505856

CURRENT ISSUE DATE:
01/20/17

ISSUED FOR:
REVISION

REV:	DATE:	ISSUED FOR:	BY:
A	10/14/16	FOR CLIENT REVIEW	KLS
B	11/14/16	REVISION	KLS
C	01/20/17	REVISION	KLO

CONSULTANT:

W-T
W-T COMMUNICATION DESIGN GROUP, LLC.
WIRELESS INFRASTRUCTURE
2675 Pratum Avenue
Hoffman Estates, Illinois 60192
PH: (224) 293-6333 FAX: (224) 293-6444
www.wtengineering.com

IL. License No.: 184.006042 Exp: 04/30/17

COPYRIGHT © 2017 W-T COMMUNICATION DESIGN GROUP, LLC.

DRAWN BY:	CHK:	APV:
KLS	JKR	JKR

LICENSER:

JEFFERY S. GUTOWSKY
PROFESSIONAL ENGINEER
STATE OF ILLINOIS
LICENSE # 062-047235
EXPIRES: 11/30/2017 SIGNED: / /

SHEET TITLE:
EQUIPMENT SPECIFICATIONS

SHEET NUMBER: C-13
REVISION: C

Interfaces

Figure: FHFB Interfaces

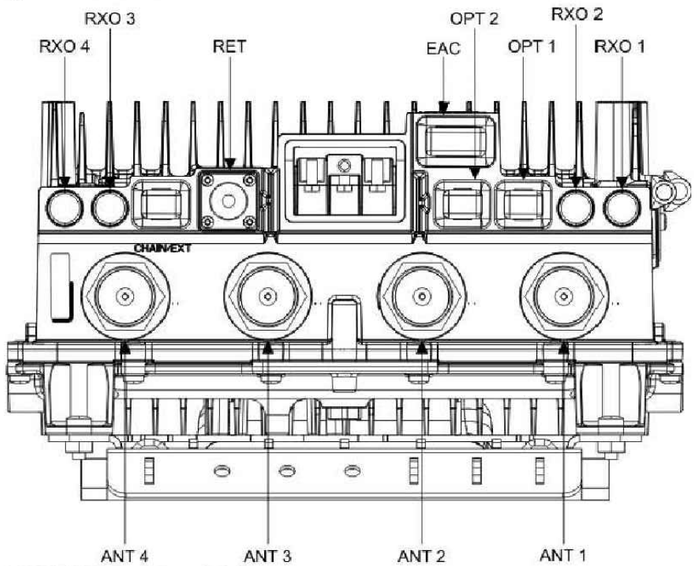

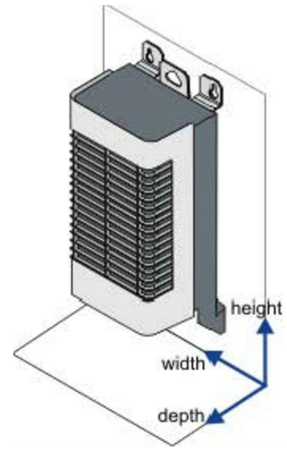

Interface	Label on the HW	Number of interfaces	Connector type
Power connector	DC IN	1	3-pole screw terminal
Antenna connector	ANT	4	7/16
RF external connector	Rx EXT	4	QMA
Remote Electrical Tilt	RET	1	8-pin circular
External Alarm Connection	EAC	1	D-sub MDR14
Optical interface	OPT	3	SFP
Local Management Port	LMP	1	2x15 pin header

Property	Value
Height	With lower bracket: 872 mm (34.3 in.) Without lower bracket: 637 mm (25.1 in.) Without brackets: 585 mm (23.0 in.)
Depth	200 mm (7.8 in.)
Width	Without solar shield: 320 mm (12.6 in.)
Weight	With lower bracket: 23 kg (51.0 lbs) Without solar shield and mounting shroud: 22 kg (68.5 lbs)

FHFB DETAIL

SCALE: NONE

1

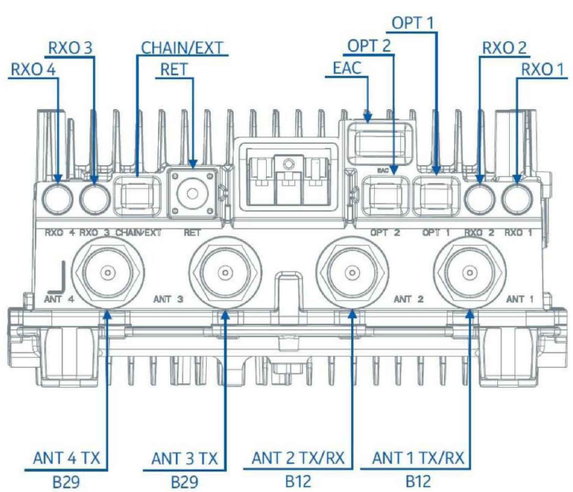

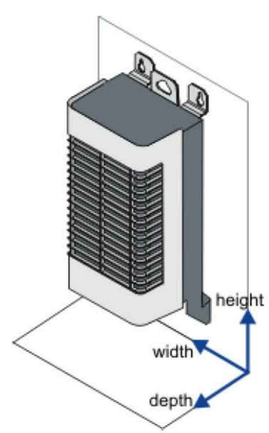

Interface	Label on the HW	Number of interfaces	Connector type
Power connector	DC IN	1	3-pole screw terminal
Antenna connector	ANT	4	7/16"
RF external connector	Rx EXT	4	QMA
Remote Electrical Tilt	RET	1	8-pin circular
External Alarm Connection	EAC	1	D-sub MDR14
Optical interface	OPT1, OPT2, Chain/EXT	3	SFP (6 GB)
Local Management Port	LMP	1	2x15 pin header

Property	Value
Height	With lower bracket: 872 mm (34.3 in.) Without lower bracket: 637 mm (25.1 in.) Without brackets: 583 mm (22.9 in.)
Depth	160 mm (6.3 in.)
Width	Without solar shield: 320 mm (12.6 in.)
Weight	Unit weight: 24 kg (53.0 lbs.) Mounted weight: 26 kg (57 lbs)

FRBG DETAIL

SCALE: NONE

2

Eco-Site
240 LEIGH FARM ROAD, SUITE 415
DURHAM, NC 27707

PROJECT INFORMATION:

MARQUETTE DRIVE/IL-0107
LDD PARKING/CH95621D

769 BOLINGBROOK DR.
ROMEOVILLE, IL, 60446
WILL COUNTY

T1505856

CURRENT ISSUE DATE:
01/20/17

ISSUED FOR:
REVISION

REV:	DATE:	ISSUED FOR:	BY:
A	10/14/16	FOR CLIENT REVIEW	KLS
B	11/14/16	REVISION	KLS
C	01/20/17	REVISION	KLO

CONSULTANT:

W-T
W-T COMMUNICATION DESIGN GROUP, LLC.
WIRELESS INFRASTRUCTURE
2675 Pratum Avenue
Hoffman Estates, Illinois 60192
PH: (224) 293-6333 FAX: (224) 293-6444
www.wtengineering.com

IL. License No.: 184.006042 Exp: 04/30/17

COPYRIGHT © 2017 W-T COMMUNICATION DESIGN GROUP, LLC.

DRAWN BY:	CHK:	APV:
KLS	JKR	JKR

LICENSER:

JEFFERY S. GUTOWSKY
PROFESSIONAL ENGINEER
STATE OF ILLINOIS
LICENSE # 062-047235
EXPIRES: 11/30/2017 SIGNED: / /

SHEET TITLE:
EQUIPMENT SPECIFICATIONS

SHEET NUMBER: C-14
REVISION: C

Section 1 - Site Information

Site ID: CH95621D
Status: Final
Version: 0.1
Project Type: L700
Approved: 11/23/2016 8:20:20 AM
Approved By: GSM1900\SNajeeb1
Last Modified: 11/23/2016 8:20:20 AM
Last Modified By: GSM1900\SNajeeb1

Site Name: LDD Parking
Site Class: Monopole
Site Type: Structure Non Building
Solution Type:
Plan Year:
Market: CHICAGO
Vendor: Nokia
Landlord: Eco-Site

Latitude: 41.66917300
Longitude: -88.06695900
Address: 769 S Bolingbrook Dr
City, State: Romeoville, IL
Region: CENTRAL

RAN Template: 716R
AL Template: 716R

Sector Count: 3 | **Antenna Count:** 3 | **Coax Line Count:** 0 | **TMA Count:** 0 | **RRU Count:** 3

Section 6 - A&L Equipment

Existing Template: Custom
Proposed Template: 716R

Sector 1 (Proposed) view from front (Note: the images show view from behind)

Coverage Type	A - Outdoor Macro				
Antenna	1				
Antenna Model	Nokia FASB RAS (Penta)				
Azimuth	30				
M. Tilt	2				
Height	120				
Ports	P1	P2	P3	P4	P5
Active Tech.	L700	U1900 L1900	U1900 L1900	L2100	L2100
Dark Tech.					
Restricted Tech.					
Decomm. Tech.					
E. Tilt	5	5	5	5	5
Cables					
TMAs					
Diplexers / Combiners					
Radio					
Sector Equipment					

Unconnected Equipment:

Scope of Work:

Sector 2 (Proposed) view from front (Note: the images show view from behind)

Coverage Type	A - Outdoor Macro				
Antenna	1				
Antenna Model	Nokia FASB RAS (Penta)				
Azimuth	140				
M. Tilt	2				
Height	120				
Ports	P1	P2	P3	P4	P5
Active Tech.	L700	U1900 L1900	U1900 L1900	L2100	L2100
Dark Tech.					
Restricted Tech.					
Decomm. Tech.					
E. Tilt	3	3	3	3	3
Cables					
TMAs					
Diplexers / Combiners					
Radio					
Sector Equipment					

Unconnected Equipment:

Scope of Work:

Sector 3 (Proposed) view from front (Note: the images show view from behind)

Coverage Type	A - Outdoor Macro				
Antenna	1				
Antenna Model	Nokia FASB RAS (Penta)				
Azimuth	270				
M. Tilt	2				
Height	120				
Ports	P1	P2	P3	P4	P5
Active Tech.	L700	U1900 L1900	U1900 L1900	L2100	L2100
Dark Tech.					
Restricted Tech.					
Decomm. Tech.					
E. Tilt	3	3	3	3	3
Cables					
TMAs					
Diplexers / Combiners					
Radio					
Sector Equipment					

Unconnected Equipment:

Scope of Work:

ANTENNA RF DATA SHEETS

SCALE: NONE

1

Eco-Site
240 LEIGH FARM ROAD, SUITE 415
DURHAM, NC 27707

PROJECT INFORMATION:

MARQUETTE DRIVE/IL-0107
LDD PARKING/CH95621D

769 BOLINGBROOK DR.
ROMEOVILLE, IL, 60446
WILL COUNTY

T1505856

CURRENT ISSUE DATE:

01/20/17

ISSUED FOR:

REVISION

REV:	DATE:	ISSUED FOR:	BY:
A	10/14/16	FOR CLIENT REVIEW	KLS
B	11/14/16	REVISION	KLS
C	01/20/17	REVISION	KLO

CONSULTANT:

W-T
W-T COMMUNICATION DESIGN GROUP, LLC.
WIRELESS INFRASTRUCTURE
2675 Pratum Avenue
Hoffman Estates, Illinois 60192
PH: (224) 293-6333 FAX: (224) 293-6444
www.wtengineering.com
IL. License No.: 184.006042 Exp: 04/30/17

COPYRIGHT © 2017 W-T COMMUNICATION DESIGN GROUP, LLC.

DRAWN BY:	CHK:	APV:
KLS	JKR	JKR

LICENSER:

JEFFERY S. GUTOWSKY
PROFESSIONAL ENGINEER
STATE OF ILLINOIS
LICENSE # 062-047235
EXPIRES: 11/30/2017 SIGNED: / /

SHEET TITLE:

RF DATA SHEET

SHEET NUMBER: **C-15**

REVISION: **C**

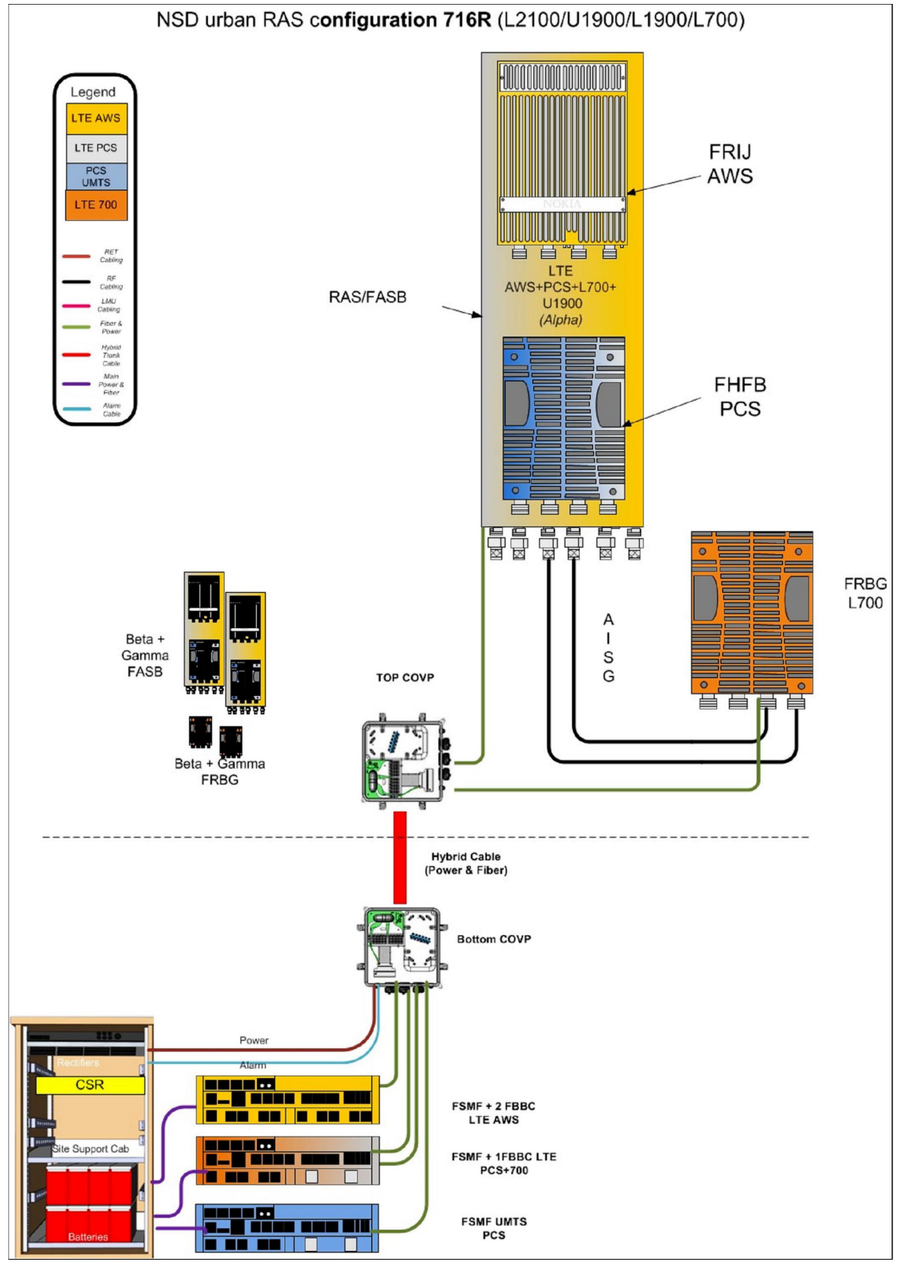

ANTENNA CONFIGURATION SHEET	1
SCALE: NONE	

Eco-Site
240 LEIGH FARM ROAD, SUITE 415
DURHAM, NC 27707

PROJECT INFORMATION:

MARQUETTE DRIVE/IL-0107
LDD PARKING/CH95621D

769 BOLINGBROOK DR.
ROMEOVILLE, IL, 60446
WILL COUNTY

T1505856

CURRENT ISSUE DATE:

01/20/17

ISSUED FOR:

REVISION

REV:	DATE:	ISSUED FOR:	BY:
A	10/14/16	FOR CLIENT REVIEW	KLS
B	11/14/16	REVISION	KLS
C	01/20/17	REVISION	KLO

CONSULTANT:

W-T
W-T COMMUNICATION DESIGN GROUP, LLC.
WIRELESS INFRASTRUCTURE
2675 Pratum Avenue
Hoffman Estates, Illinois 60192
PH: (224) 293-6333 FAX: (224) 293-6444
www.wtengineering.com
IL. License No.: 184.006042 Exp: 04/30/17

COPYRIGHT © 2017 W-T COMMUNICATION DESIGN GROUP, LLC.

DRAWN BY:	CHK:	APV:
KLS	JKR	JKR

LICENSER:

JEFFERY S. GUTOWSKY
PROFESSIONAL ENGINEER
STATE OF ILLINOIS
LICENSE # 062-047235
EXPIRES: 11/30/2017 SIGNED: / /

SHEET TITLE:

ANTENNA CONFIGURATION SHEET

SHEET NUMBER:	REVISION:
C-16	C

PLANTING LIST - ALTERNATIVE 3 & TREE COVERAGE REQUIREMENTS

SYM./KEY	REQUIRED PER 100 LF	PROPOSED PER XX LF EXPANSION	BOTANICAL NAME	COMMON NAME	SPECIFICATION	
					HEIGHT OR SIZE (AT INSTALL)	SPACING
	N/A	13	thuja accidentalis 'mission'	MISSION ARBORVITAE	6'-0"	5'-0" O.C. MIN.

GENERAL LANDSCAPE NOTES:

1. NO PLANT SUBSTITUTIONS ARE PERMITTED WITHOUT WRITTEN APPROVAL OF THE OWNERS REPRESENTATIVE.
2. ALL PLANT AND BED LINE LOCATIONS SHALL BE STAKED IN THE FIELD AND APPROVED BY THE OWNER'S REPRESENTATIVE PRIOR TO INSTALLATION.
3. ALL PLANTINGS SHALL BE INSTALLED WITH THE SPECIFIED LAYER OF MULCH AND COMPOST. REFERENCE DETAILS FOR DEPTH AND TYPE OF MULCH.
4. ALL PROPOSED PLANT MATERIALS SHALL COMPLY WITH THE SIZING AND CURRENT EDITION OF ANSI Z60.1–1996–'AMERICAN STANDARD FOR NURSERY STOCK'.
5. LAND OWNER WILL BE RESPONSIBLE FOR MAINTAINING AND WATERING ALL LANDSCAPING ON SITE.

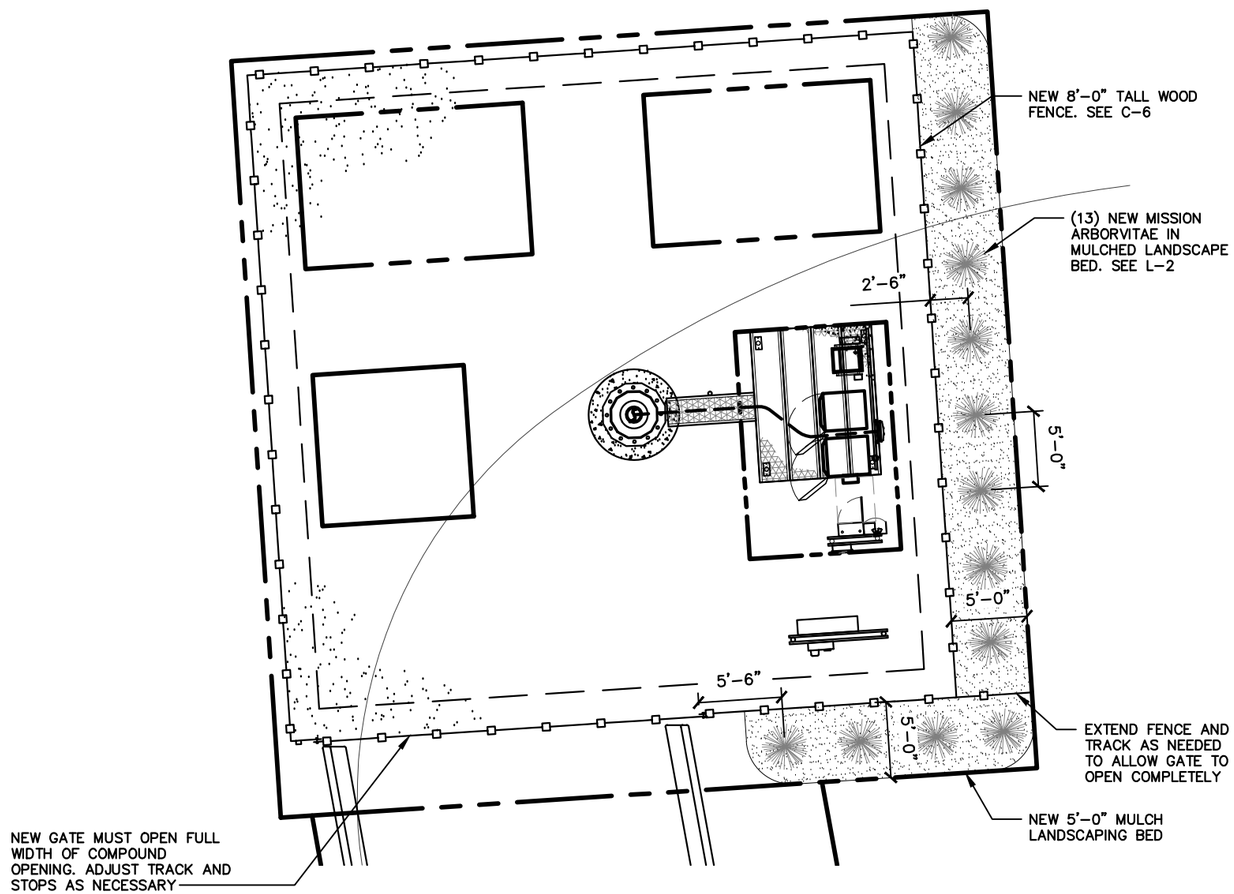

N

0 10 20 30

GRAPHIC SCALE: 1" = 10'

LANDSCAPING PLAN

SCALE: 1" = 10'-0" (1" = 5'-0" ON 24"X36" SHEET)

1

Eco-Site
240 LEIGH FARM ROAD, SUITE 415
DURHAM, NC 27707

PROJECT INFORMATION:

MARQUETTE DRIVE/IL-0107
LDD PARKING/CH95621D

769 BOLINGBROOK DR.
ROMEOVILLE, IL, 60446
WILL COUNTY
T1505856

CURRENT ISSUE DATE: 01/20/17

ISSUED FOR: REVISION

REV:	DATE:	ISSUED FOR:	BY:
A	10/14/16	FOR CLIENT REVIEW	KLS
B	11/14/16	REVISION	KLS
C	01/20/17	REVISION	KLO

CONSULTANT:
W-T
W-T COMMUNICATION DESIGN GROUP, LLC.
WIRELESS INFRASTRUCTURE
2675 Pratum Avenue
Hoffman Estates, Illinois 60192
PH: (224) 293-6333 FAX: (224) 293-6444
www.wtengineering.com
IL. License No.: 184.006042 Exp: 04/30/17

COPYRIGHT © 2017 W-T COMMUNICATION DESIGN GROUP, LLC.

DRAWN BY:	CHK:	APV:
KLS	JKR	JKR

LICENSER:

JEFFERY S. GUTOWSKY
PROFESSIONAL ENGINEER
STATE OF ILLINOIS
LICENSE # 062–047235
EXPIRES: 11/30/2017 SIGNED: / /

SHEET TITLE: LANDSCAPING PLAN

SHEET NUMBER: L-1

REVISION: C

NOTE:
ALL MATERIALS SURROUNDING THE TREE ROOT BALL, INCLUDING WIRING, ARE TO BE REMOVED PRIOR TO PLANTING OF TREES.

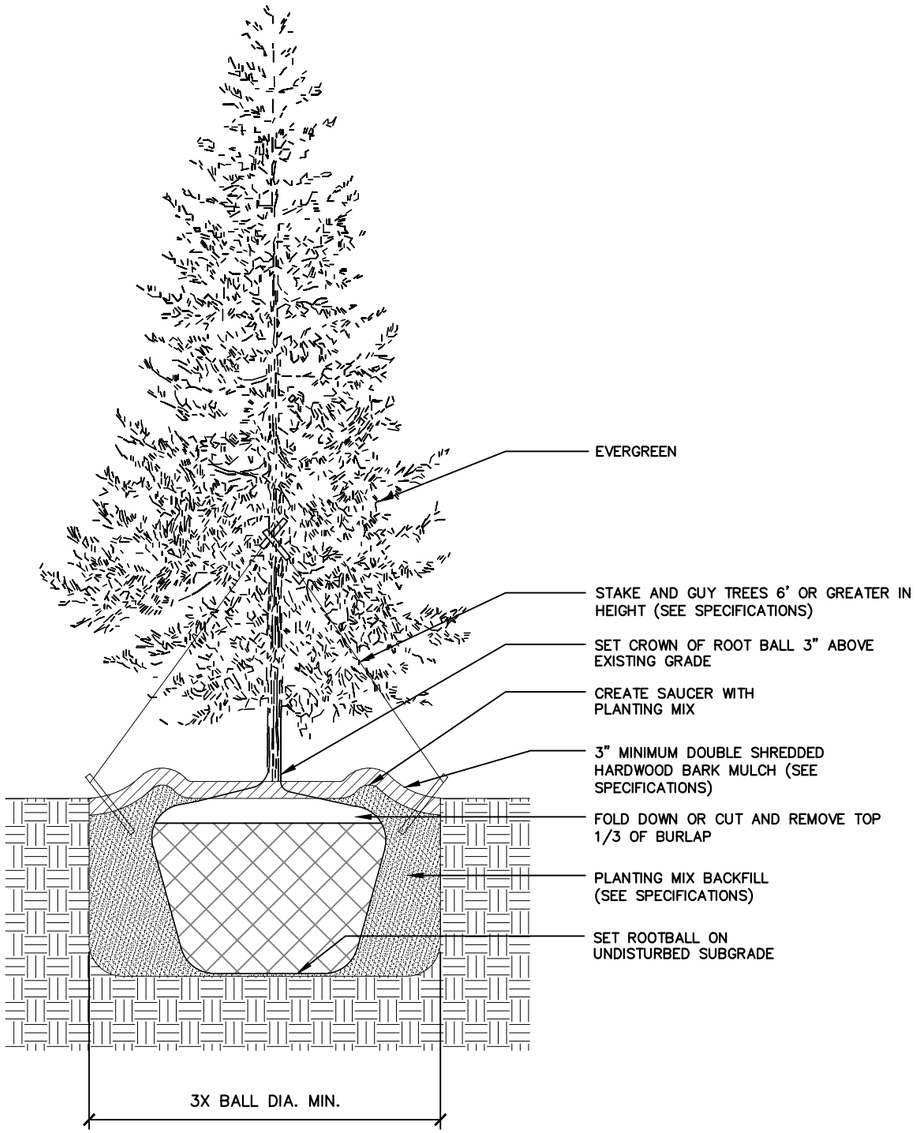

TYPICAL EVERGREEN TREE PLANTING DETAIL

SCALE: NONE

1

ALL PLACEMENT OF LANDSCAPING SHALL MEET THE FOLLOWING CONDITIONS:

1. ALL PLANT MATERIAL SHALL BE PLANTED IN A MANNER WHICH IS NOT TO INTERFERE WITH OVERHEAD WIRES OR BE INTRUSIVE TO UTILITIES OR PAVEMENT.
2. NO TREES OR OTHER LANDSCAPING SHALL BE LOCATED CLOSER THAN 10 FEET TO A FIRE HYDRANT OR OTHER ABOVE GROUND UTILITIES.
3. NO LANDSCAPING SHALL INTERFERE WITH SITE REQUIREMENTS FOR SAFE INGRESS AND EGRESS.

INSTALLATION STANDARDS:

1. PLANT MATERIAL SHALL CONFORM WITH THE CURRENT AMERICAN STANDARDS FOR NURSERY STOCK, PUBLISHED BY THE AMERICAN ASSOCIATION OF NURSERYMEN FOR THAT TYPE OF TREE OR SHRUB AT THE TIME OF INSTALLATION.
2. ALL TREES SHALL BE GROWN IN A NURSERY LOCATED IN THE STATE OF ILLINOIS.
3. ALL PLANT MATERIAL SHALL BE INSTALLED FREE OF DISEASE AND IN A MANNER THAT ENSURES THE AVAILABILITY OF SUFFICIENT SOIL AND WATER TO SUSTAIN HEALTHY GROWTH.
4. ALL TAGS, WIRES, PLASTIC TIES AND ROPE SHALL BE CUT FROM EACH TREE TO PREVENT GIRDLING OF THE TREE. THE BURLAP SHALL BE PULLED BACK FROM THE UPPER THIRD OF THE ROOTBALL. IF A PLASTIC 'BURLAP' IS USED, IT SHALL BE REMOVED IN ITS ENTIRETY FROM THE ROOTBALL.
5. ALL PLANT MATERIAL SHALL BE PLANTED WITH A MINIMUM OF DEPTH OF THREE (3) INCHES OF MULCHED MATERIAL AND A DIAMETER OF THREE (3) FEET AROUND THE BASE OF THE TREE.
6. TREES SHALL BE STAKED WITH POSTS AND NOT STAKES IN AREAS OF HIGH WIND FOR ONE TO THREE YEARS TO ALLOW THE GROWTH OF PROPOSED ROOTS TO STABILIZE. ALL ROPES SHALL BE COVERED TO PREVENT CUTTING INTO THE BARK.
7. ANY EXCESS SOIL, CLAY, OR CONSTRUCTION DEBRIS SHALL BE REMOVED FROM THE PLANTING SITE, PRIOR TO PLANTING OF INDIVIDUAL TREES AT FINAL GRADE.
8. THE JURISDICTION, AT ITS DISCRETION, HAS THE RIGHT TO RETAIN A PROFESSIONAL LANDSCAPE ARCHITECT OR ARBORIST TO REVIEW SUBMITTED LANDSCAPE PLAN AND THE PROFESSIONAL LANDSCAPE ARCHITECT OR ARBORIST WILL SUBMIT A WRITTEN REPORT TO THE PLANNING AND ZONING COMMISSION. ALL EXPENSES INCURRED BY THE JURISDICTION FOR THE USE OF THE LANDSCAPE ARCHITECT OR ARBORIST SHALL BE REIMBURSED BY THE DEVELOPER.

PLANTING SEASONS:

1. PLANTS MUST BE PLANTED DURING THE FOLLOWING DATES: APRIL 1ST TO MAY 15TH AND SEPTEMBER 1ST TO OCTOBER 1ST.
2. THE PLANTING PERIODS INDICATED MAY BE EXTENDED DUE TO WEATHER CONDITIONS OR OTHER FACTORS, WHICH MUST BE APPROVED BY THE LANDSCAPE ARCHITECT/ENGINEER.
3. THE CONTRACTOR WILL BE RELIEVED FOR HIS GUARANTEE RESPONSIBILITY SHOULD THE OWNER REQUIRE PLANT MATERIAL INSTALLATIONS TO BE COMPLETED DURING OTHER TIMES THAN THE PLANTING PERIODS INDICATED.

PLANTING:

1. ALL SHADE TREES, ORNAMENTAL TREES, EVERGREEN TREES AND SHRUBS SHALL BE PLANTED IN HOLES EXCAVATED AT LEAST 3x THE WIDTH OF THE DIAMETER OF THE BALL OR CONTAINER AND DEEP ENOUGH SO THAT THE TOP OF THE BALL OR SOIL IN THE CONTAINER IS AT OR JUST ABOVE EXISTING GRADE.
2. ALL TWINE OR ROPE MUST BE CUT AND REMOVED AND THE BURLAP FOLDED AWAY FROM THE TOP OF THE BALL. THE EXCAVATION MUST BE BACKFILLED WITH THE PLANTING MIXTURE AND WATERED. ANY SETTLEMENT WILL BE FILLED WITH PLANTING MIXTURE.
3. A 4" DEEP SAUCER, SIMILAR TO THE DIAMETER OF THE PLANTING HOLE SHALL BE CREATED USING PLANTING MIX.
4. PLANTING MIX TO CONSIST OF 1/3 TOP SOIL, 1/3 SOIL FROM EXCAVATION, AND 1/3 MUSHROOM COMPOST (OR 1/3 PEAT MOSS).

CLEAN UP:

1. ALL DEBRIS GENERATED DURING THE INSTALLATION OF PLANT MATERIALS MUST BE REMOVED FROM THE SITE.
2. ALL PAVEMENTS AND WALKS MUST BE SWEPT AFTER EACH DAYS WORK. UPON COMPLETION OF THE WORK, ALL PAVEMENTS MUST BE WASHED TO REMOVE ALL MUD OR DIRT.

NOTES

SCALE: NONE

2

Eco-Site
240 LEIGH FARM ROAD, SUITE 415
DURHAM, NC 27707

PROJECT INFORMATION:

MARQUETTE DRIVE/IL-0107
LDD PARKING/CH95621D

769 BOLINGBROOK DR.
ROMEOVILLE, IL, 60446
WILL COUNTY

T1505856

CURRENT ISSUE DATE:

01/20/17

ISSUED FOR:

REVISION

REV:	DATE:	ISSUED FOR:	BY:
A	10/14/16	FOR CLIENT REVIEW	KLS
B	11/14/16	REVISION	KLS
C	01/20/17	REVISION	KLO

CONSULTANT:

W-T
W-T COMMUNICATION DESIGN GROUP, LLC.
WIRELESS INFRASTRUCTURE
2675 Pratum Avenue
Hoffman Estates, Illinois 60192
PH: (224) 293-6333 FAX: (224) 293-6444
www.wtengineering.com
IL. License No.: 184.006042 Exp: 04/30/17

COPYRIGHT © 2017 W-T COMMUNICATION DESIGN GROUP, LLC.

DRAWN BY:	CHK:	APV:
KLS	JKR	JKR

LICENSER:

JEFFERY S. GUTOWSKY
PROFESSIONAL ENGINEER
STATE OF ILLINOIS
LICENSE # 062-047235
EXPIRES: 11/30/2017 SIGNED: / /

SHEET TITLE:

LANDSCAPING DETAILS

SHEET NUMBER: **L-2**

REVISION: **C**

VOLTAGE DROP			
FROM NEW METER CENTER TO EQUIPMENT			
LENGTH OF RUN	WIRE SIZE	VOLTAGE DROP (VOLTS)	PERCENTAGE OF VOLTAGE
25'–0"	3/0 AWG	0.85V	0.36%

VOLTAGE DROP			
FROM UTILITY POLE TO METER CENTER			
LENGTH OF RUN	WIRE SIZE	VOLTAGE DROP (VOLTS)	PERCENTAGE OF VOLTAGE
390'–0"	500 MCM	6.22V	2.59%

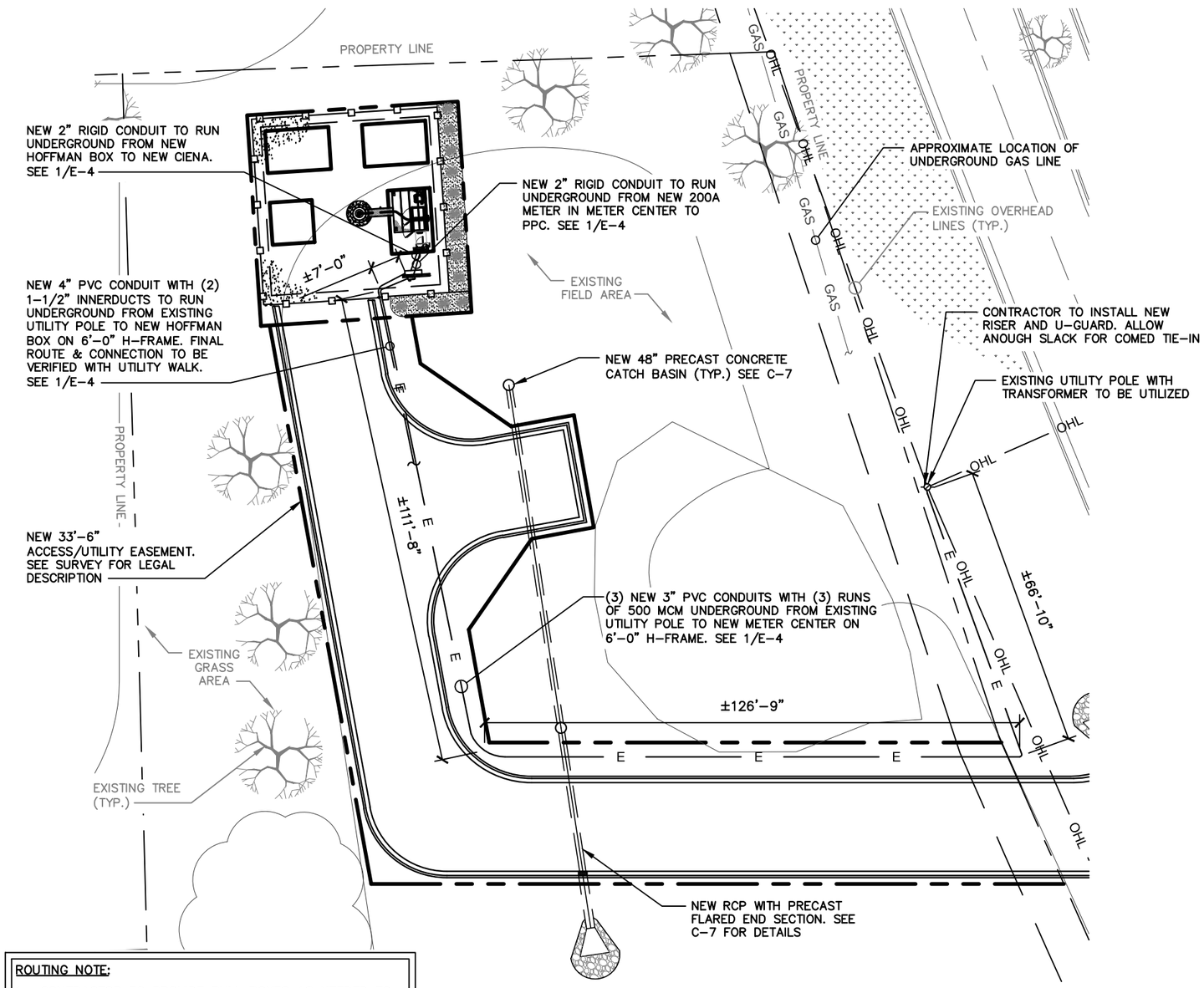

ROUTING NOTE:

1. CONTRACTOR TO PROVIDE PULL BOXES AS NEEDED TO ENSURE NO GREATER THAN 360 DEGREES OF BENDS BETWEEN PULL POINTS IN CONDUIT RUNS.
2. CONTRACTOR COORDINATE WITH LOCAL UTILITY COMPANY FOR SERVICE TO THIS POINT.
3. ALL CONDUIT TO BE RUN WITHIN 2' UTILITY BUFFER AS SHOWN ON CIVIL PLANS. CONDUIT SHOWN OUTSIDE OF 2' UTILITY BUFFER FOR CLARITY PURPOSES ONLY.

0 30 60 90

GRAPHIC SCALE: 1" = 30'

NOTES AND SPECIFICATIONS:

1. ALL ELECTRICAL WORK SHALL COMPLY WITH NEC, STATE, AND LOCAL CODES.
2. CONTRACTOR SHALL OBTAIN OWNER/TENANT SPECIFICATIONS AND REVIEW FOR ADDITIONAL DETAILS AND REQUIREMENTS THAT MAY NOT BE SHOWN IN THESE DRAWINGS. CONTRACTOR SHALL COMPLY WITH ANY ADDITIONAL OWNER/TENANT SPECIFICATIONS AND REQUIREMENTS.
3. CONTRACTOR SHALL COORDINATE WITH THE ELECTRIC UTILITY FOR THE EXACT TRANSFORMER LOCATION, METERING REQUIREMENTS, AND SERVICE ROUTING. CONTRACTOR SHALL COORDINATE WITH THE TELEPHONE UTILITY FOR THE EXACT TELEPHONE REQUIREMENTS AND SERVICE ROUTING.
4. PRIOR TO PURCHASING EQUIPMENT, THE CONTRACTOR SHALL CONTACT THE ELECTRIC UTILITY AND OBTAIN IN WRITING THE MAXIMUM AVAILABLE FAULT CURRENT AT THE UTILITY SERVICE POINT. PROVIDE MAX AFC SIGNAGE AS REQUIRED PER NEC 110.24. THE CONTRACTOR SHALL ENSURE ALL ELECTRICAL EQUIPMENT, CIRCUIT BREAKERS, DISCONNECTS, FUSES, AND PANELBOARDS HAVE A FAULT CURRENT INTERRUPTING RATING GREATER THAN THE AVAILABLE FAULT CURRENT. IN NO CASE SHALL THE FAULT CURRENT INTERRUPTING RATING BE LESS THAN 10,000 AMPS.
5. CONTRACTOR TO PROVIDE 2–200 LB TEST POLYETHYLENE PULL CORDS SECURELY FASTENED AT EACH END OF POWER AND TELCO CONDUIT. PROVIDE CAPS ON ENDS OF UNUSED CONDUIT.
6. CONTRACTOR TO PROVIDE A REBAR MARKER WITH AT LEAST 2 FEET EXPOSED ABOVE GRADE AND PAINTED BRIGHT ORANGE TO INDICATE LOCATION OF CONDUIT CAPPED BELOW GRADE.
7. PRIOR TO TRENCHING, CONTRACTOR SHALL LOCATE ALL EXISTING UNDERGROUND UTILITIES. CONTRACTOR SHALL REPAIR AT CONTRACTOR'S EXPENSE ANY DAMAGE TO EXISTING UTILITIES.
8. CONTRACTOR TO VERIFY EXACT ROUTING OF POWER AND TELCO CONDUIT WITH LOCAL UTILITIES AND OWNER/TENANT. ENSURE ALL CONDUIT STUB–UPS ACCOMMODATE EQUIPMENT REQUIREMENTS.
9. UNDERGROUND CONDUITS SHALL BE SCHEDULE 40 PVC UNLESS NOTED OTHERWISE. USE SCHEDULE 80 PVC UNDER ROADS. USE LONG–SWEEP RIGID GALVANIZED STEEL (RGS) FOR ELBOWS. USE RGS FOR RISERS TO EQUIPMENT. MANUFACTURED BENDS SHALL HAVE A MINIMUM RADIUS OF 36" FOR CONDUIT.
10. CONDUIT RUNS SHALL HAVE A CONTINUOUS SLOPE DOWNWARD AND AWAY FROM THE EQUIPMENT TO ALLOW WATER TO FLOW AWAY FROM THE EQUIPMENT AND SHELTER. EXCAVATE TRENCHES ALONG STRAIGHT LINES PRIOR TO INSTALLING CONDUIT TO ACCOMMODATE ADJUSTING THE ELEVATION, AS NEEDED.
11. CONDUIT ENTERING EQUIPMENT SHALL BE SEALED WITH A SEALANT THAT IS IDENTIFIED FOR USE WITH THE CABLE/CONDUCTOR INSULATION, SHIELDING, ETC.
12. THE OWNER SHALL FURNISH AND THE CONTRACTOR SHALL INSTALL ADDITIONAL SIGNAGE TO BE LOCATED AT THE COMPOUND FENCE. CONTRACTOR SHALL COORDINATE WITH OWNER/TENANT ECO–SITE CONSTRUCTION MANAGER FOR PLACEMENT OF SIGNAGE.
13. UPON COMPLETION OF CONSTRUCTION, CONTRACTOR IS RESPONSIBLE FOR REPAIRING ANY DAMAGE CAUSED BY CONSTRUCTION ACTIVITIES TO THE LANDSCAPING AREA.
14. CONTRACTOR SHALL PROVIDE A LABEL TO READ: "OPENING THE SHELTER DISCONNECT WILL CAUSE THE SHELTER GENERATOR TO START. TO REMOVE POWER ENTIRELY FROM THE SHELTER, THE GENERATOR MUST BE TURNED OFF AND THE GENERATOR BREAKER MUST BE OPENED."
15. CONTRACTOR SHALL ENSURE A MINIMUM 3' CLEARANCE IN FRONT OF ELECTRICAL PANELS PER NEC.
16. ALL ELECTRICAL MATERIALS, DEVICES, APPLIANCES AND EQUIPMENT SHALL BE LABEL LISTED BY AN APPROVED THIRD PARTY TESTING AGENCY.

N

BASIC SERVICE ROUTING PLAN | 1

SCALE: 1" = 30'-0" (1" = 15'-0" ON 24"X36" SHEET)

Eco-Site
240 LEIGH FARM ROAD, SUITE 415
DURHAM, NC 27707

PROJECT INFORMATION:

MARQUETTE DRIVE/IL-0107
LDD PARKING/CH95621D

769 BOLINGBROOK DR.
ROMEOVILLE, IL, 60446
WILL COUNTY
T1505856

CURRENT ISSUE DATE: 01/20/17

ISSUED FOR: REVISION

REV:	DATE:	ISSUED FOR:	BY:
A	10/14/16	FOR CLIENT REVIEW	KLS
B	11/14/16	REVISION	KLS
C	01/20/17	REVISION	KLO

CONSULTANT:
W-T
W-T COMMUNICATION DESIGN GROUP, LLC.
WIRELESS INFRASTRUCTURE
2675 Pratum Avenue
Hoffman Estates, Illinois 60192
PH: (224) 293-6333 FAX: (224) 293-6444
www.wtengineering.com
IL. License No.: 184.006042 Exp: 04/30/17

COPYRIGHT © 2017 W-T COMMUNICATION DESIGN GROUP, LLC.

DRAWN BY:	CHK:	APV:
KLS	JKR	JKR

LICENSER:

JEFFERY S. GUTOWSKY
PROFESSIONAL ENGINEER
STATE OF ILLINOIS
LICENSE # 062–047235
EXPIRES: 11/30/2017 SIGNED: / /

SHEET TITLE:

BASIC SERVICE ROUTING PLAN

SHEET NUMBER: **E-1**

REVISION: **C**

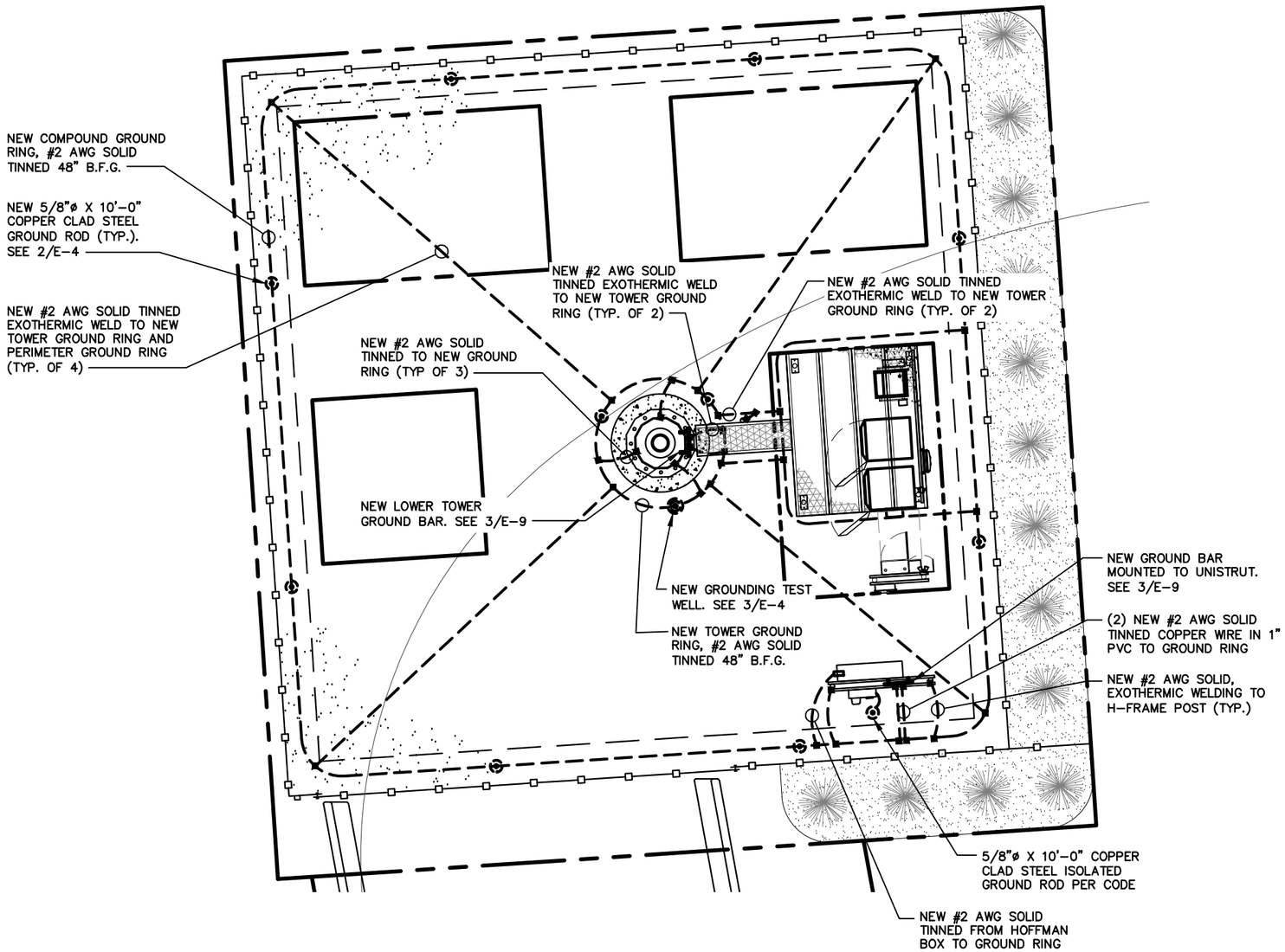

NOTES AND SPECIFICATIONS:

1. THE GROUND RING SHALL CONSIST OF 2 AWG TINNED SOLID BARE COPPER CONDUCTOR, UNLESS NOTED OTHERWISE, BURIED AT 48" BELOW FINISHED GRADE (OR BELOW FROSTLINE). ALL CONNECTIONS SHALL BE MADE USING AN EXOTHERMIC WELD, UNLESS NOTED OTHERWISE.
2. GROUND CONDUCTOR BEND RADIUS SHALL NOT BE LESS THAN 8".
3. MINIMUM SPACING BETWEEN GROUND RODS SHALL NOT BE LESS THAN 10', UNLESS NOTED OTHERWISE.
4. CONTRACTOR SHALL BOND THE TOWER GROUND BAR (TOGB) TO THE GROUND RING USING A 2 AWG TINNED SOLID BARE COPPER CONDUCTOR AND AN EXOTHERMIC WELD.
5. SHELTER INTERIOR GROUNDING PROVIDED BY SHELTER SUPPLIER, SHOWN FOR CLARITY. CONTRACTOR SHALL BOND THE MAIN GROUND BAR (MGB) & EXTERNAL GROUND BAR (GB2) TO THE GROUND RING USING 2 AWG TINNED SOLID BARE COPPER CONDUCTORS AND EXOTHERMIC WELDS.
6. ALL GROUNDING/BONDING CONDUCTORS LOCATED ABOVE FINISHED GRADE SHALL BE RUN IN 1" PVC CONDUIT.
7. CONTRACTOR SHALL NOTIFY THE OWNER/TENANT ECO-SITE CONSTRUCTION MANAGER TO ALLOW THE OWNER/TENANT ECO-SITE CONSTRUCTION MANAGER TO INSPECT THE GROUNDING SYSTEM PRIOR TO BACKFILLING.

LEGEND

- GROUNDING WIRE
- EXOTHERMIC CONNECTION
- MECHANICAL CONNECTION/DOUBLE HOLE LUG TYPE CONNECTION
- COMPRESSION FITTING
- GROUND ROD
- GROUND TEST WELL

N

0 8' 16' 24'

GRAPHIC SCALE: 1/8" = 1'

GROUNDING PLAN

SCALE: 1/8" = 1'-0" (1/4" = 1'-0" ON 24"X36" SHEET)

1

Eco-Site
240 LEIGH FARM ROAD, SUITE 415
DURHAM, NC 27707

PROJECT INFORMATION:

MARQUETTE DRIVE/IL-0107
LDD PARKING/CH95621D

769 BOLINGBROOK DR.
ROMEOVILLE, IL, 60446
WILL COUNTY

T1505856

CURRENT ISSUE DATE:

01/20/17

ISSUED FOR:

REVISION

REV:	DATE:	ISSUED FOR:	BY:
A	10/14/16	FOR CLIENT REVIEW	KLS
B	11/14/16	REVISION	KLS
C	01/20/17	REVISION	KLO

CONSULTANT:

W-T COMMUNICATION DESIGN GROUP, LLC.
WIRELESS INFRASTRUCTURE
2675 Pratum Avenue
Hoffman Estates, Illinois 60192
PH: (224) 293-6333 FAX: (224) 293-6444
www.wtengineering.com
IL. License No.: 184.006042 Exp: 04/30/17

COPYRIGHT © 2017 W-T COMMUNICATION DESIGN GROUP, LLC.

DRAWN BY:	CHK:	APV:
KLS	JKR	JKR

LICENSER:

JEFFERY S. GUTOWSKY
PROFESSIONAL ENGINEER
STATE OF ILLINOIS
LICENSE # 062-047235
EXPIRES: 11/30/2017 SIGNED: / /

SHEET TITLE:

GROUNDING PLAN

SHEET NUMBER: **E-2**

REVISION: **C**

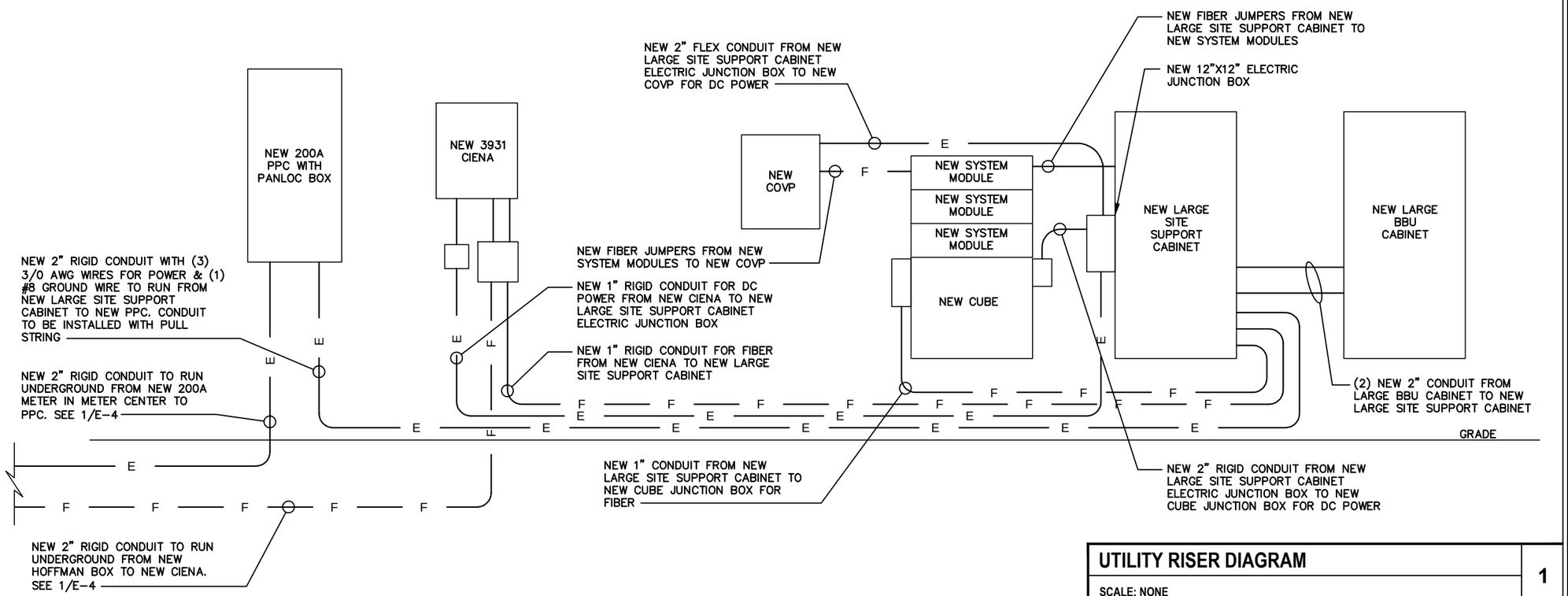

UTILITY RISER DIAGRAM

SCALE: NONE

1

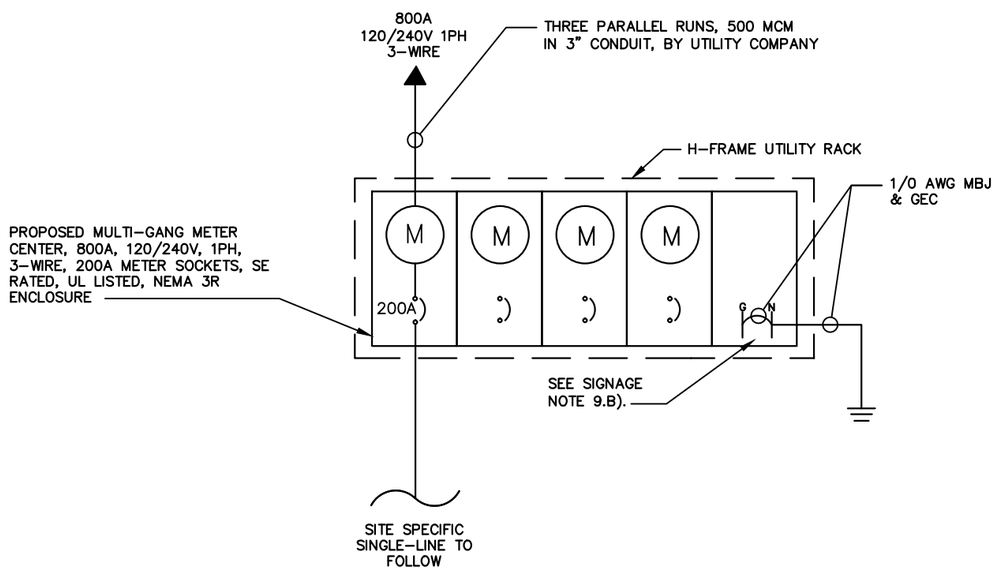

NOTES AND SPECIFICATIONS:

1. ELECTRIC UTILITY WILL PROVIDE METER AND INCOMING SERVICE LATERAL CONDUCTORS.
2. ALL ELECTRICAL WORK SHALL COMPLY WITH NEC, STATE, AND LOCAL CODES.
3. CONTRACTOR SHALL OBTAIN OWNER/TENANT EQUIPMENT SHELTER DRAWINGS AND REVIEW FOR ADDITIONAL DETAILS AND REQUIREMENTS THAT MAY NOT BE SHOWN IN THESE DRAWINGS. CONTRACTOR SHALL COMPLY WITH ANY ADDITIONAL OWNER/TENANT SPECIFICATIONS AND REQUIREMENTS THAT MAY BE ADDRESSED IN THE EQUIPMENT SHELTER DRAWINGS.
4. PRIOR TO PURCHASING EQUIPMENT, THE CONTRACTOR SHALL CONTACT THE ELECTRIC UTILITY AND OBTAIN IN WRITING THE MAXIMUM AVAILABLE FAULT CURRENT AT THE UTILITY SERVICE POINT. PROVIDE MAX AFC SIGNAGE AS REQUIRED PER NEC 110.24. THE CONTRACTOR SHALL ENSURE ALL ELECTRICAL EQUIPMENT, CIRCUIT BREAKERS, DISCONNECTS, FUSES, AND PANELBOARDS HAVE A FAULT CURRENT INTERRUPTING RATING GREATER THAN THE AVAILABLE FAULT CURRENT. IN NO CASE SHALL THE FAULT CURRENT INTERRUPTING RATING BE LESS THAN 10,000 AMPS.
5. THE GROUNDED SERVICE CONDUCTOR (NEUTRAL CONDUCTOR) SHALL BE GROUNDED AT THE SERVICE DISCONNECT ONLY.
6. ALL POWER CIRCUITS SHALL USE COPPER CONDUCTOR WITH THHN/THWN INSULATION. ALL TERMINATIONS SHALL BE RATED FOR AT LEAST 75 DEGREES C.
7. CONTRACTOR SHALL PROVIDE GROUND FAULT CIRCUIT INTERRUPTER (GFCI) TYPE RECEPTACLES FOR ALL UTILITY RECEPTACLES.
8. CONTRACTOR SHALL ENSURE ALL NEUTRAL CONDUCTORS HAVE WHITE INSULATION AND EQUIPMENT GROUND CONDUCTORS HAVE GREEN INSULATION. COLOR TAPE IDENTIFICATION OF THESE CONDUCTORS IS NOT ALLOWED.
9. PER NEC ART 702 PROVIDE SIGNAGE AS FOLLOWS:
   A) AT SHELTER PANEL PP1: "EMERGENCY POWER IS SUPPLIED BY STAND-BY GENERATOR LOCATED IN ADJACENT ROOM"
   B) AT SERVICE DISCONNECT:

WARNING – SHOCK HAZARD EXISTS IF GROUNDING ELECTRODE CONDUCTOR OR BONDING JUMPER CONNECTION IN THIS EQUIPMENT IS REMOVED WHILE ALTERNATE SOURCE(S) IS ENERGIZED.

SINGLE-LINE DIAGRAM

SCALE: NONE

2

Eco-Site
240 LEIGH FARM ROAD, SUITE 415
DURHAM, NC 27707

PROJECT INFORMATION:

MARQUETTE DRIVE/IL-0107
LDD PARKING/CH95621D

769 BOLINGBROOK DR.
ROMEOVILLE, IL, 60446
WILL COUNTY

T1505856

CURRENT ISSUE DATE:

01/20/17

ISSUED FOR:

REVISION

REV:	DATE:	ISSUED FOR:	BY:
A	10/14/16	FOR CLIENT REVIEW	KLS
B	11/14/16	REVISION	KLS
C	01/20/17	REVISION	KLO

CONSULTANT:

W-T
W-T COMMUNICATION DESIGN GROUP, LLC.
WIRELESS INFRASTRUCTURE
2675 Pratum Avenue
Hoffman Estates, Illinois 60192
PH: (224) 293-6333 FAX: (224) 293-6444
www.wtengineering.com
IL. License No.: 184.006042 Exp: 04/30/17

COPYRIGHT © 2017 W-T COMMUNICATION DESIGN GROUP, LLC.

DRAWN BY:	CHK:	APV:
KLS	JKR	JKR

LICENSER:

JEFFERY S. GUTOWSKY
PROFESSIONAL ENGINEER
STATE OF ILLINOIS
LICENSE # 062-047235
EXPIRES: 11/30/2017 SIGNED: / /

SHEET TITLE:

UTILITY RISER & SINGLE-LINE DIAGRAMS

SHEET NUMBER: E-3

REVISION: C

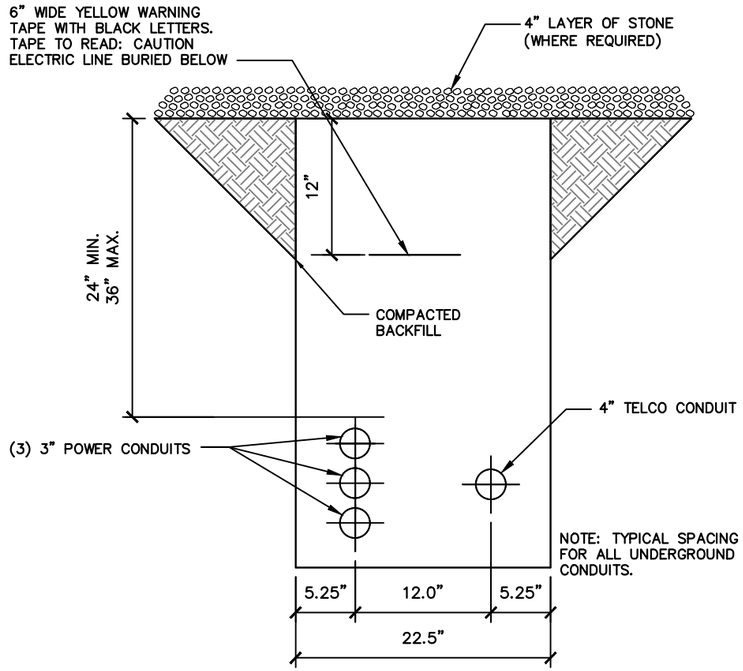

UTILITY TRENCH DETAIL (TYP.)

SCALE: NONE

1

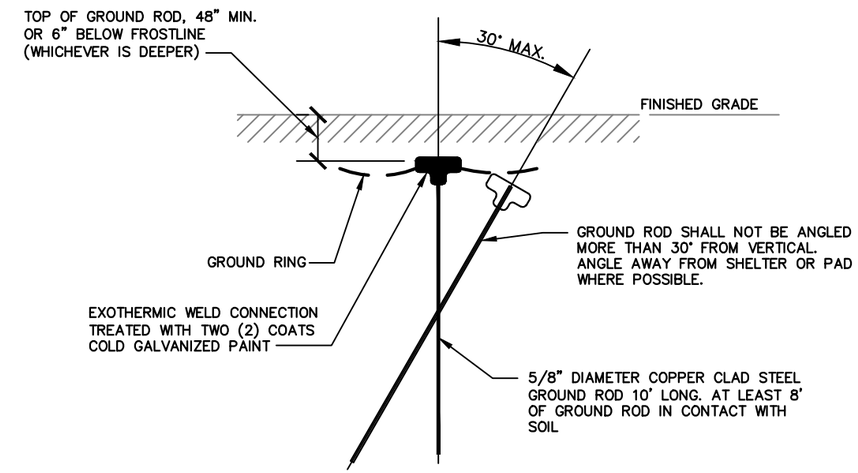

GROUND ROD DETAIL

SCALE: NONE

2

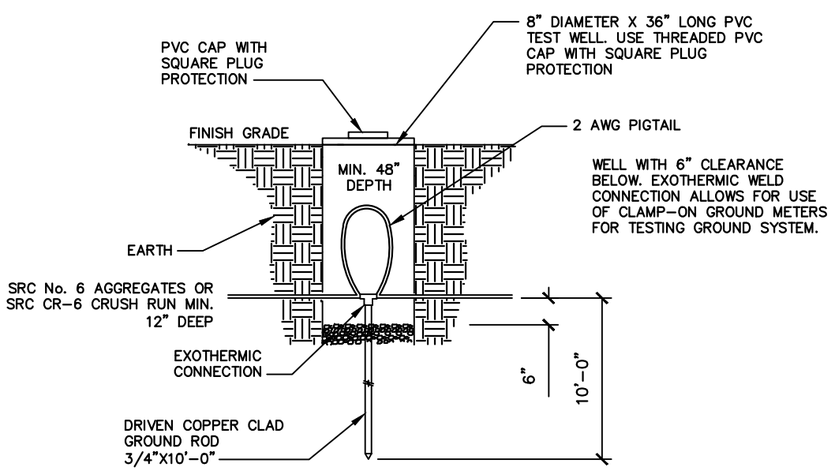

GROUND ROD TEST WELL

SCALE: NONE

3

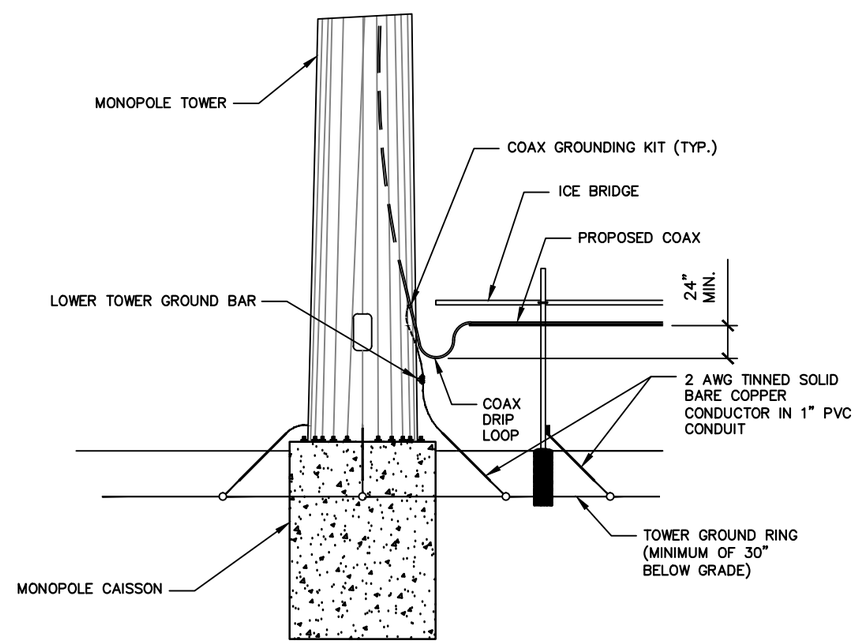

DRIP LOOP DETAIL

SCALE: NONE

4

Eco-Site
240 LEIGH FARM ROAD, SUITE 415
DURHAM, NC 27707

PROJECT INFORMATION:

MARQUETTE DRIVE/IL-0107
LDD PARKING/CH95621D

769 BOLINGBROOK DR.
ROMEOVILLE, IL, 60446
WILL COUNTY

T1505856

CURRENT ISSUE DATE:

01/20/17

ISSUED FOR:

REVISION

REV:	DATE:	ISSUED FOR:	BY:
A	10/14/16	FOR CLIENT REVIEW	KLS
B	11/14/16	REVISION	KLS
C	01/20/17	REVISION	KLO

CONSULTANT:

W-T
W-T COMMUNICATION DESIGN GROUP, LLC.
WIRELESS INFRASTRUCTURE
2675 Pratum Avenue
Hoffman Estates, Illinois 60192
PH: (224) 293-6333 FAX: (224) 293-6444
www.wtengineering.com
IL. License No.: 184.006042 Exp: 04/30/17

COPYRIGHT © 2017 W-T COMMUNICATION DESIGN GROUP, LLC.

DRAWN BY:	CHK:	APV:
KLS	JKR	JKR

LICENSER:

JEFFERY S. GUTOWSKY
PROFESSIONAL ENGINEER
STATE OF ILLINOIS
LICENSE # 062-047235
EXPIRES: 11/30/2017 SIGNED: / /

SHEET TITLE:

ELECTRICAL DETAILS

SHEET NUMBER: **E-4**

REVISION: **C**

GENERAL NOTES:

1. ALL WORK SHALL CONFORM TO THE NATIONAL ELECTRICAL CODE, STATE BUILDING CODES AND THE LOCAL BUILDING CODES. ALL COMPONENTS SHALL BE U.L. LISTED.
2. REFER TO SITE LAYOUT PLAN FOR THE EXACT LOCATION OF H-FRAME.
3. CONTRACTOR TO COORDINATE WITH LOCAL UTILITY COMPANY FOR METER.
4. CONTRACTOR TO PROVIDE AND INSTALL METER SOCKET.
5. CONTRACTOR TO LOCATE METER RACK TO ENSURE WORKING SPACES REQUIRED BY THE NEC (ART. 110.26), STATE, OR LOCAL CODES ARE MAINTAINED BETWEEN FRONT OF ENCLOSURES AND THE CHAIN LINK FENCE.
6. SHOW LOCATION (INCLUDING DIMENSIONS) OF ALL CAPPED UNDERGROUND CONDUIT ON FINAL AS-BUILT DRAWINGS SUBMITTED TO OWNER.
7. COORDINATE EXACT LOCATION OF UNDERGROUND FEEDERS AND CIRCUITRY WITH THE OWNER.
8. CONTRACTOR SHALL COORDINATE WITH LOCAL ELECTRICAL AUTHORITY HAVING JURISDICTION (AHJ) AND OTHER TRADES TO DETERMINE "FROST" LINE, AND TYPES OF RACEWAYS REQUIRED FOR INSTALLATION.
9. ALL CONDUITS ABOVE GROUND SHALL BE GALVANIZED CONDUIT.
10. CONTRACTOR TO CONTACT LOCAL UTILITY PRIOR TO PURCHASING METER CENTER TO VERIFY ANY PARTICULAR REQUIREMENTS, SUCH AS LEVER BYPASS, ETC.

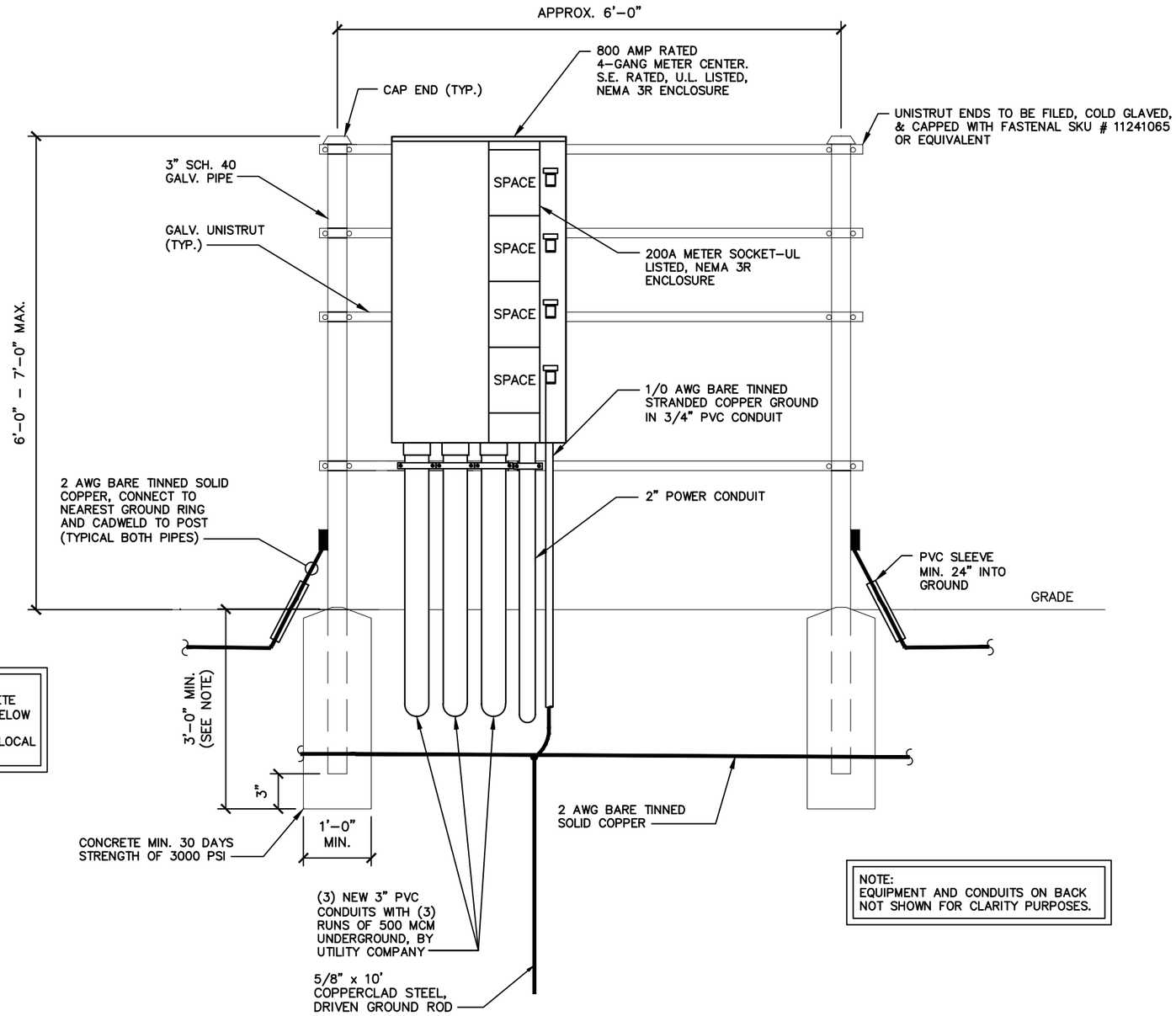

NOTE:
CONSTRUCT SO CONCRETE FOOTING EXTENDS 6" BELOW FROST LINE AND IN COMPLIANCE WITH ALL LOCAL AND STATE CODES.

NOTE:
EQUIPMENT AND CONDUITS ON BACK NOT SHOWN FOR CLARITY PURPOSES.

H-FRAME DETAIL (FRONT)

SCALE: NONE

1

Eco-Site
240 LEIGH FARM ROAD, SUITE 415
DURHAM, NC 27707

PROJECT INFORMATION:

MARQUETTE DRIVE/IL-0107
LDD PARKING/CH95621D

769 BOLINGBROOK DR.
ROMEOVILLE, IL, 60446
WILL COUNTY

T1505856

CURRENT ISSUE DATE:

01/20/17

ISSUED FOR:

REVISION

REV:	DATE:	ISSUED FOR:	BY:
A	10/14/16	FOR CLIENT REVIEW	KLS
B	11/14/16	REVISION	KLS
C	01/20/17	REVISION	KLO

CONSULTANT:

W-T
W-T COMMUNICATION DESIGN GROUP, LLC.
WIRELESS INFRASTRUCTURE
2675 Pratum Avenue
Hoffman Estates, Illinois 60192
PH: (224) 293-6333 FAX: (224) 293-6444
www.wtengineering.com
IL. License No.: 184.006042 Exp: 04/30/17

COPYRIGHT © 2017 W-T COMMUNICATION DESIGN GROUP, LLC.

DRAWN BY:	CHK:	APV:
KLS	JKR	JKR

LICENSER:

JEFFERY S. GUTOWSKY
PROFESSIONAL ENGINEER
STATE OF ILLINOIS
LICENSE # 062-047235
EXPIRES: 11/30/2017 SIGNED: / /

SHEET TITLE:

H-FRAME DETAILS

SHEET NUMBER: E-5

REVISION: C

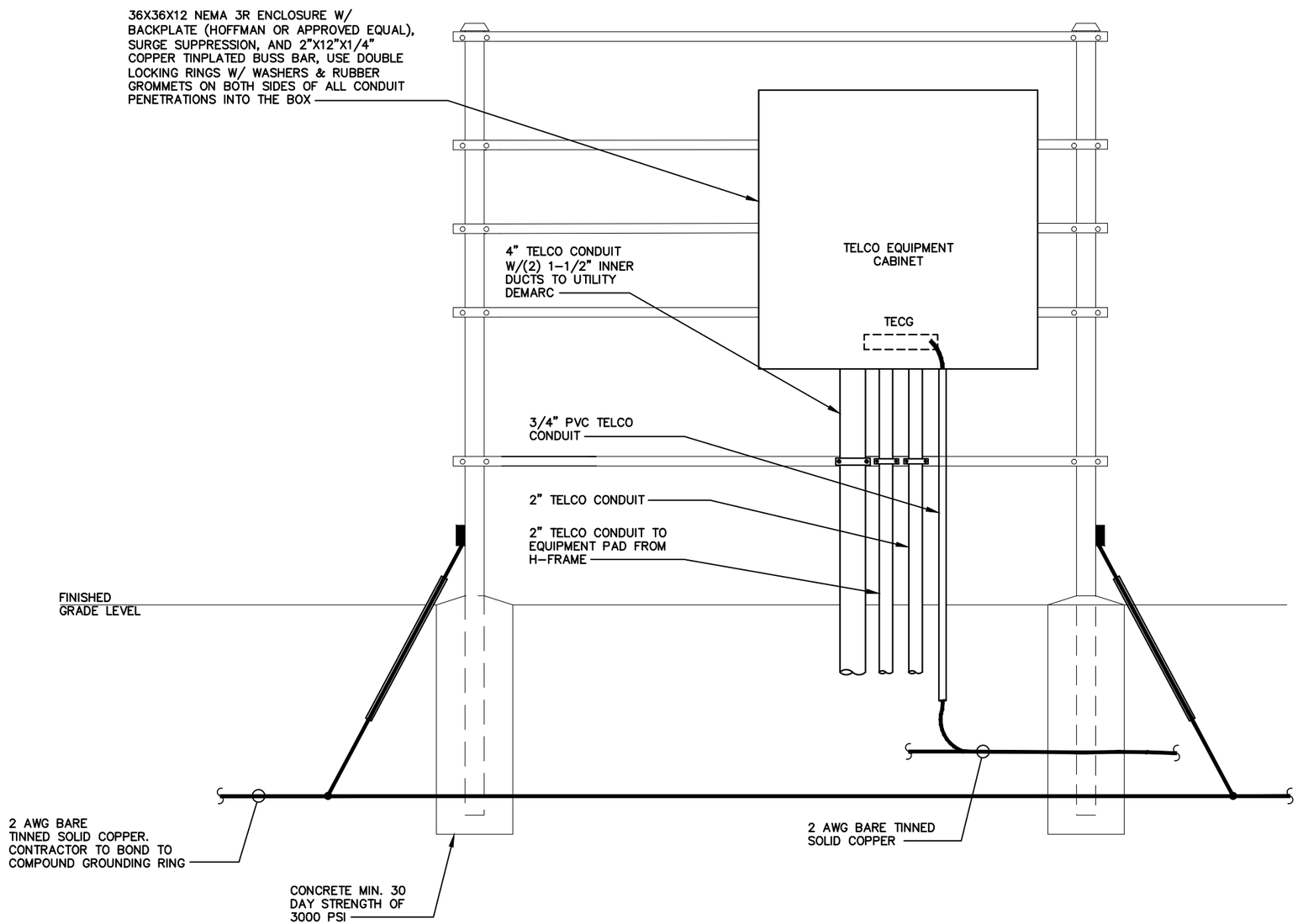

NOTE:
EQUIPMENT AND CONDUITS ON FRONT SIDE NOT SHOWN FOR CLARITY PURPOSES.

H-FRAME DETAIL (REAR)

SCALE: NONE

1

Eco-Site
240 LEIGH FARM ROAD, SUITE 415
DURHAM, NC 27707

PROJECT INFORMATION:

MARQUETTE DRIVE/IL-0107
LDD PARKING/CH95621D

769 BOLINGBROOK DR.
ROMEOVILLE, IL, 60446
WILL COUNTY

T1505856

CURRENT ISSUE DATE:

01/20/17

ISSUED FOR:

REVISION

REV:	DATE:	ISSUED FOR:	BY:
A	10/14/16	FOR CLIENT REVIEW	KLS
B	11/14/16	REVISION	KLS
C	01/20/17	REVISION	KLO

CONSULTANT:

W-T
W-T COMMUNICATION DESIGN GROUP, LLC.
WIRELESS INFRASTRUCTURE
2675 Pratum Avenue
Hoffman Estates, Illinois 60192
PH: (224) 293-6333 FAX: (224) 293-6444
www.wtengineering.com
IL. License No.: 184.006042 Exp: 04/30/17

COPYRIGHT © 2017 W-T COMMUNICATION DESIGN GROUP, LLC.

DRAWN BY:	CHK:	APV:
KLS	JKR	JKR

LICENSER:

JEFFERY S. GUTOWSKY
PROFESSIONAL ENGINEER
STATE OF ILLINOIS
LICENSE # 062-047235
EXPIRES: 11/30/2017 SIGNED: / /

SHEET TITLE:

H-FRAME DETAILS

SHEET NUMBER: **E-6**

REVISION: **C**

TYPICAL ANTENNA SECTOR

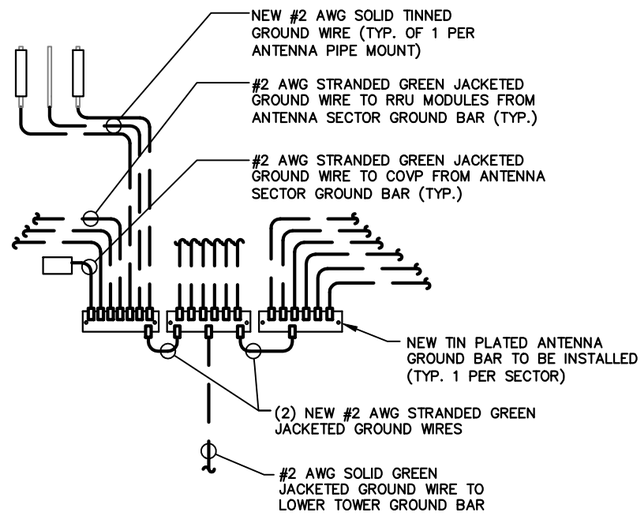

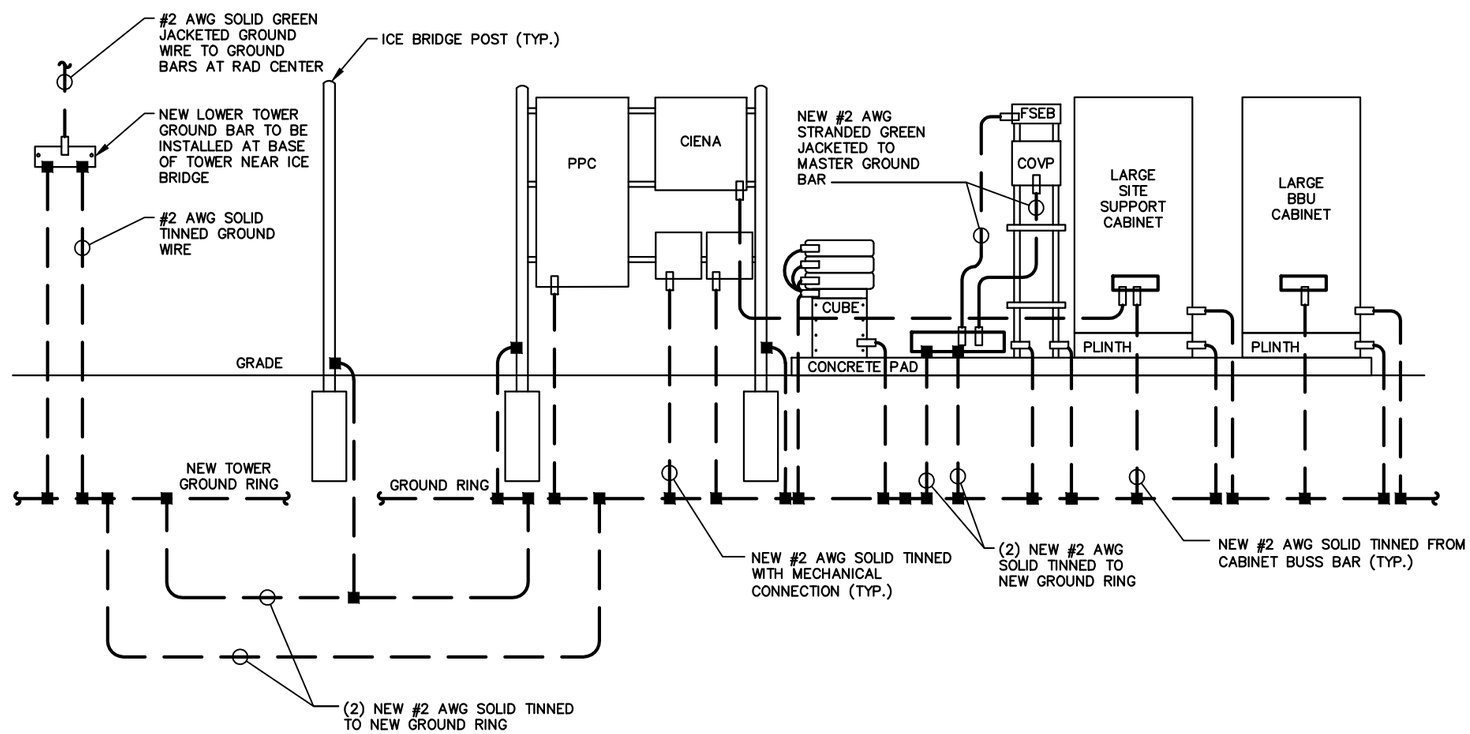

LEGEND

- GROUNDING WIRE
- EXOTHERMIC CONNECTION
- MECHANICAL CONNECTION/DOUBLE HOLE LUG TYPE CONNECTION
- BOND TO TOWER

GROUNDING RISER | 1

SCALE: NONE

Eco-Site
240 LEIGH FARM ROAD, SUITE 415
DURHAM, NC 27707

PROJECT INFORMATION:

MARQUETTE DRIVE/IL-0107
LDD PARKING/CH95621D

769 BOLINGBROOK DR.
ROMEOVILLE, IL, 60446
WILL COUNTY

T1505856

CURRENT ISSUE DATE: 01/20/17

ISSUED FOR: REVISION

REV:	DATE:	ISSUED FOR:	BY:
A	10/14/16	FOR CLIENT REVIEW	KLS
B	11/14/16	REVISION	KLS
C	01/20/17	REVISION	KLO

CONSULTANT:
W-T
W-T COMMUNICATION DESIGN GROUP, LLC.
WIRELESS INFRASTRUCTURE
2675 Pratum Avenue
Hoffman Estates, Illinois 60192
PH: (224) 293-6333 FAX: (224) 293-6444
www.wtengineering.com
IL. License No.: 184.006042 Exp: 04/30/17

COPYRIGHT © 2017 W-T COMMUNICATION DESIGN GROUP, LLC.

DRAWN BY:	CHK:	APV:
KLS	JKR	JKR

LICENSER:

JEFFERY S. GUTOWSKY
PROFESSIONAL ENGINEER
STATE OF ILLINOIS
LICENSE # 062-047235
EXPIRES: 11/30/2017 SIGNED: / /

SHEET TITLE:

GROUNDING DETAILS

SHEET NUMBER: **E-7**

REVISION: **C**

DETAIL NOT USED

SCALE: NONE

1

NOTE:
ECO-SITE "NO GROUND BAR"
SYSTEM INSTALLED AS NEEDED.

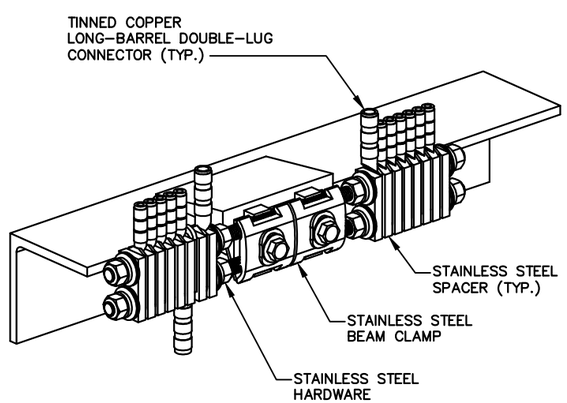

GROUND BAR (BEAM CLAMP)

SCALE: NONE

2

NOTE:
ECO-SITE "NO GROUND BAR"
SYSTEM INSTALLED AS NEEDED.

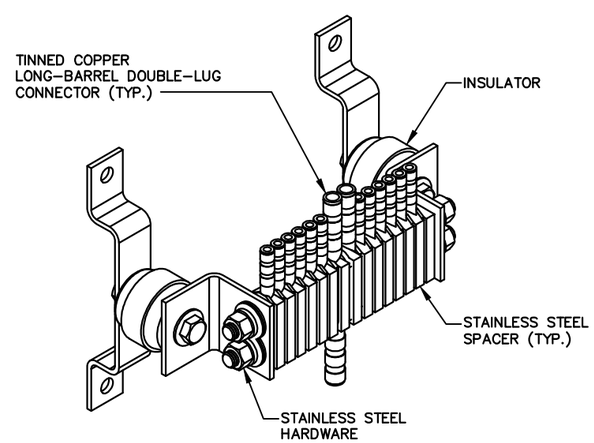

GROUND BAR (INSULATED)

SCALE: NONE

3

NOTE:
ECO-SITE "NO GROUND BAR"
SYSTEM INSTALLED AS NEEDED.

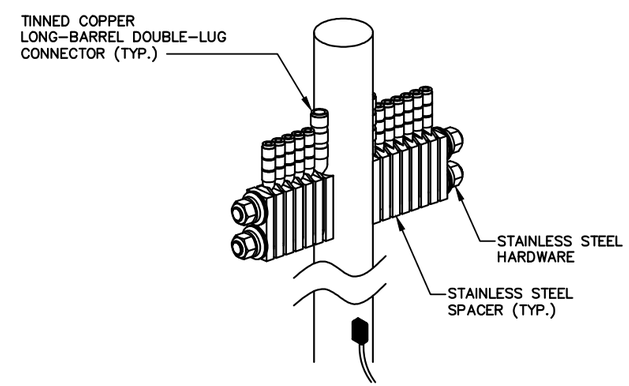

GROUND BAR (POST MOUNTED)

SCALE: NONE

4

Eco-Site
240 LEIGH FARM ROAD, SUITE 415
DURHAM, NC 27707

PROJECT INFORMATION:

MARQUETTE DRIVE/IL-0107
LDD PARKING/CH95621D

769 BOLINGBROOK DR.
ROMEOVILLE, IL, 60446
WILL COUNTY

T1505856

CURRENT ISSUE DATE:

01/20/17

ISSUED FOR:

REVISION

REV:	DATE:	ISSUED FOR:	BY:
A	10/14/16	FOR CLIENT REVIEW	KLS
B	11/14/16	REVISION	KLS
C	01/20/17	REVISION	KLO

CONSULTANT:

W-T
W-T COMMUNICATION DESIGN GROUP, LLC.
WIRELESS INFRASTRUCTURE
2675 Pratum Avenue
Hoffman Estates, Illinois 60192
PH: (224) 293-6333 FAX: (224) 293-6444
www.wtengineering.com
IL. License No.: 184.006042 Exp: 04/30/17

COPYRIGHT © 2017 W-T COMMUNICATION DESIGN GROUP, LLC.

DRAWN BY:	CHK:	APV:
KLS	JKR	JKR

LICENSER:

JEFFERY S. GUTOWSKY
PROFESSIONAL ENGINEER
STATE OF ILLINOIS
LICENSE # 062-047235
EXPIRES: 11/30/2017 SIGNED: / /

SHEET TITLE:

GROUNDING DETAILS

SHEET NUMBER: **E-8**

REVISION: **C**

DETAIL NOT USED

SCALE: NONE

1

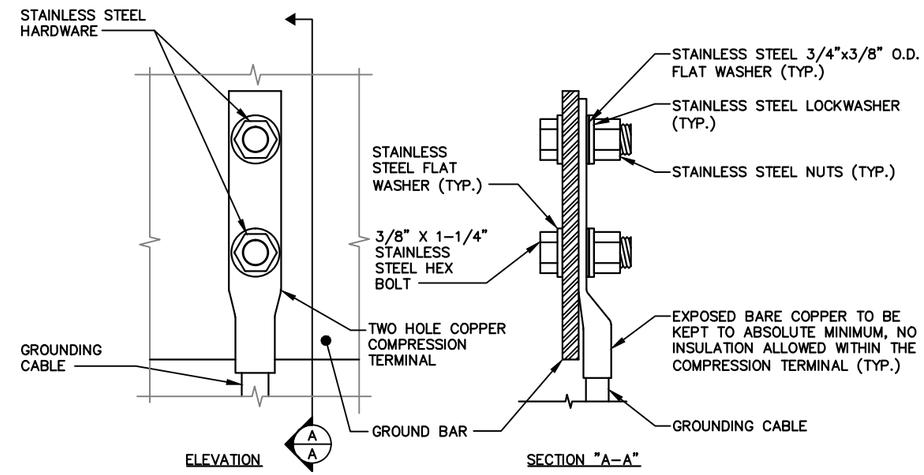

1. OXIDE INHIBITING COMPOUND TO BE USED AT ALL LOCATIONS
2. NO CRIMPING OF SOLID #2. USE EXOTHERMIC WELD ONLY

GROUND BAR CONNECTION DETAIL

SCALE: NONE

2

KEY NOTES:

1.	1/4" THK ELECTRICAL TINNED GROUND BAR HARGER OR APPROVED EQUAL. HOLE CENTERS TO MATCH NEMA DOUBLE LUG CONFIGURATION
2.	INSULATORS (UNLESS NOTED OTHERWISE)
3.	3/8" STAINLESS STEEL LOCKWASHERS
4.	WALL MOUNTING BRACKET
5.	3/8" STAINLESS STEEL BNLF BOLTS
6.	EXOTHERMICALLY WELD #2 AWG BARE TINNED SOLID COPPER CONDUCTOR TO GROUND BAR. ROUTE CONDUCTOR TO BURIED GROUND RING AND PROVIDE PARALLEL EXOTHERMIC WELD
7.	CONTRACTOR SHALL USE PERMANENT MARKER TO DRAW THE LINES BETWEEN EACH SECTION AND LABEL EACH SECTION ("P", "A", "N", "I") WITH 1" HIGH LETTERS

NOTES:
1. EXTERIOR GROUND BARS TO BE TIN PLATED
2. HARDWARE SHALL BE STAINLESS STEEL
3. CONTRACTOR SHALL GROUP INCOMING WIRES
4. CONTRACTOR TO APPLY 'KOPR-SHIELD' TO ALL CONNECTIONS

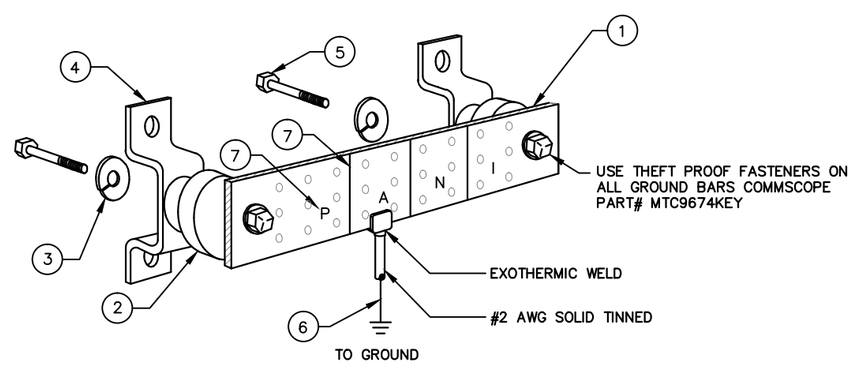

EACH GROUND CONDUCTOR TERMINATING ON ANY GROUND BAR SHALL HAVE AN IDENTIFICATION TAG ATTACHED AT EACH END THAT WILL IDENTIFY ITS ORIGIN AND DESTINATION

SECTION "P" – SURGE PRODUCERS

- COLLECTOR GROUND BAR
- GENERATOR FRAMEWORK (IF AVAILABLE)
- TELCO GROUND BAR
- COMMERCIAL POWER COMMON NEUTRAL/GROUND BOND
- FIBER GROUND BAR
- EQUIPMENT ROOM COLLECTOR GROUND BAR
- HVAC
- RECTIFIER FRAMES

SECTION "I" – ISOLATED GROUND ZONE

- ISOLATED EQUIPMENT FRAMES
- ISOLATED GROUND BAR – IGB

SECTION "A" – SURGE ABSORBERS

- INTERIOR GROUND RING
- EXTERNAL EARTH GROUND FIELD (BURIED GROUND RING)
- METALLIC COLD WATER PIPE (IF AVAILABLE)
- BUILDING STEEL (IF AVAILABLE)
- AC POWER

SECTION "N" – NON-ISOLATED GROUND ZONE EQUIPMENT

- MISCELLANEOUS NON-ISOLATED GROUND ZONE EQUIPMENT
- CABLE TRAY SYSTEM
- EQUIPMENT FRAMES
- BATTERY RACKS
- DC POWER

GROUND BAR DETAIL

SCALE: NONE

3

Eco-Site
240 LEIGH FARM ROAD, SUITE 415
DURHAM, NC 27707

PROJECT INFORMATION:

MARQUETTE DRIVE/IL-0107
LDD PARKING/CH95621D

769 BOLINGBROOK DR.
ROMEOVILLE, IL, 60446
WILL COUNTY

T1505856

CURRENT ISSUE DATE:

01/20/17

ISSUED FOR:

REVISION

REV:	DATE:	ISSUED FOR:	BY:
A	10/14/16	FOR CLIENT REVIEW	KLS
B	11/14/16	REVISION	KLS
C	01/20/17	REVISION	KLO

CONSULTANT:

W-T
W-T COMMUNICATION DESIGN GROUP, LLC.
WIRELESS INFRASTRUCTURE
2675 Pratum Avenue
Hoffman Estates, Illinois 60192
PH: (224) 293-6333 FAX: (224) 293-6444
www.wtengineering.com
IL. License No.: 184.006042 Exp: 04/30/17

COPYRIGHT © 2017 W-T COMMUNICATION DESIGN GROUP, LLC.

DRAWN BY:	CHK:	APV:
KLS	JKR	JKR

LICENSER:

JEFFERY S. GUTOWSKY
PROFESSIONAL ENGINEER
STATE OF ILLINOIS
LICENSE # 062-047235
EXPIRES: 11/30/2017 SIGNED: / /

SHEET TITLE:

GROUNDING DETAILS

SHEET NUMBER: E-9

REVISION: C